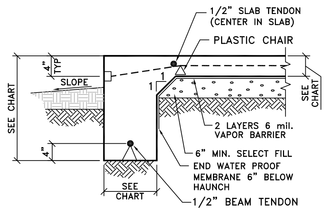

DETAIL - 1
EXTERIOR BEAM

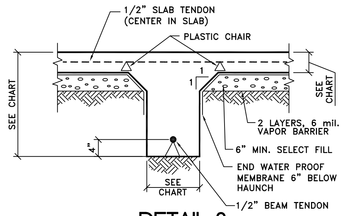

DETAIL 2
TYPICAL INTERIOR BEAM

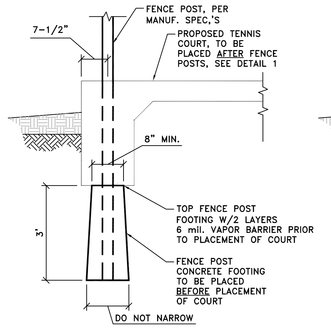

DETAIL - 3
KING POLE FOOTING

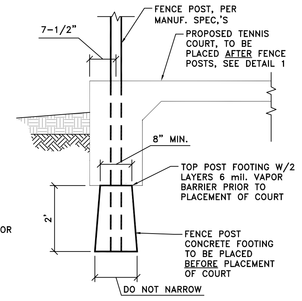

DETAIL - 4
POLE FOOTING

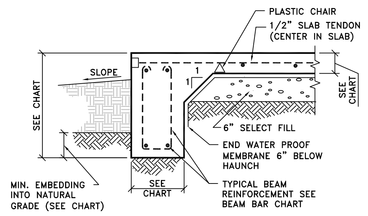

DETAIL 6
EXTERIOR BEAM - NO BRICK LUG

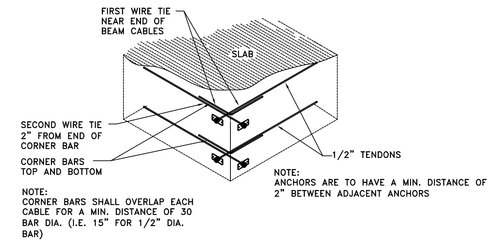

TYP. EXT. CORNER BARS-POST TENSION
FOR ALL EXT. CORNERS WHERE CABLES TERMINATE

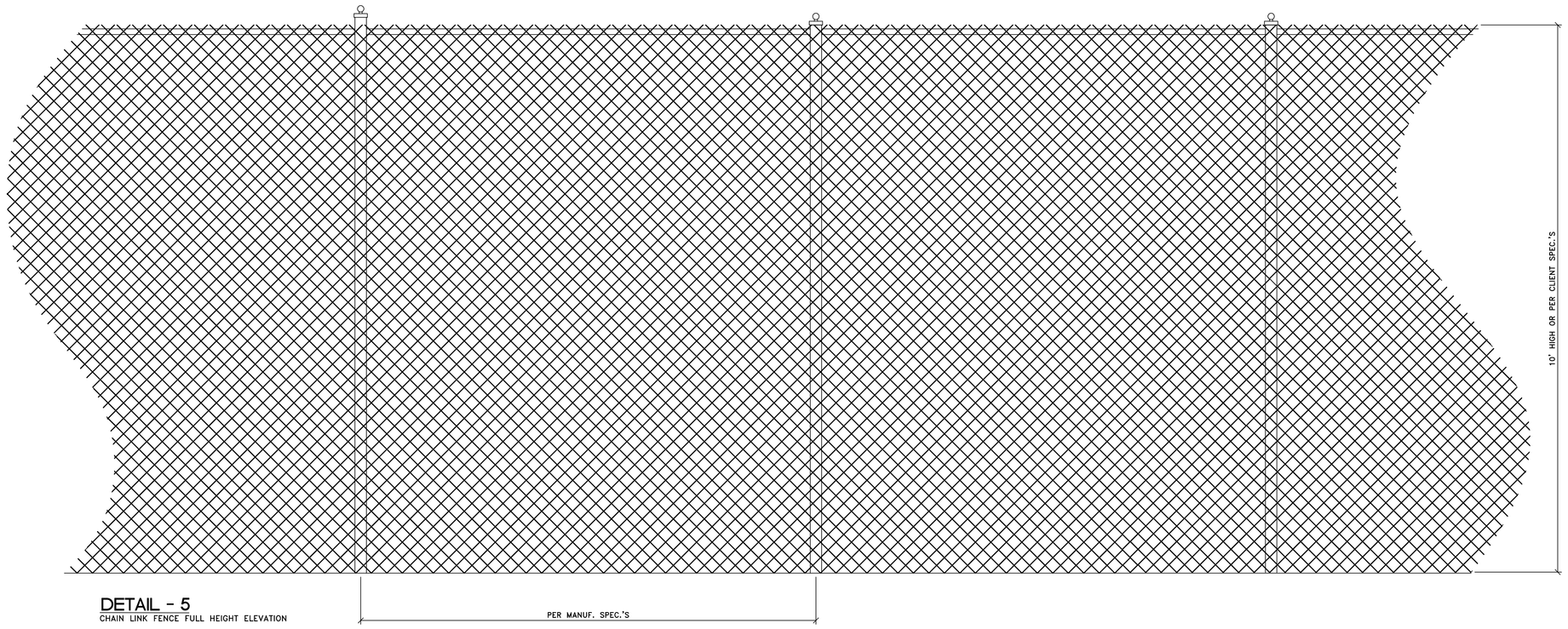

DETAIL - 5
CHAIN LINK FENCE FULL HEIGHT ELEVATION

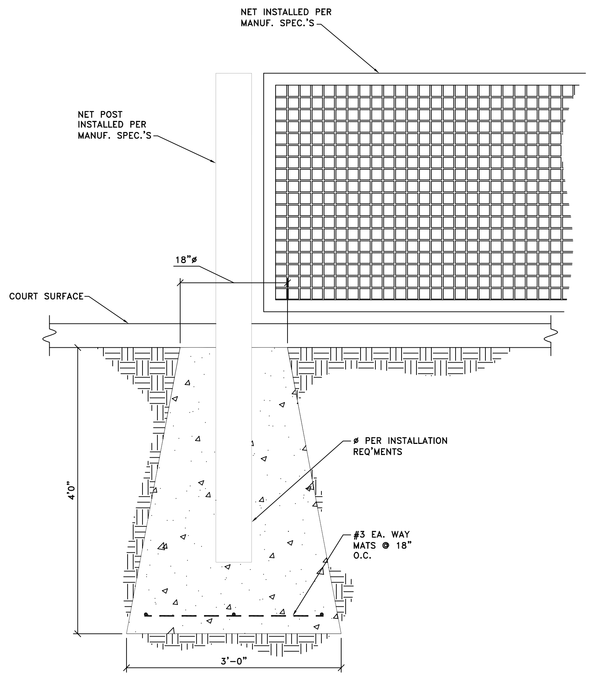

DETAIL - 8
NET POST FOOTING

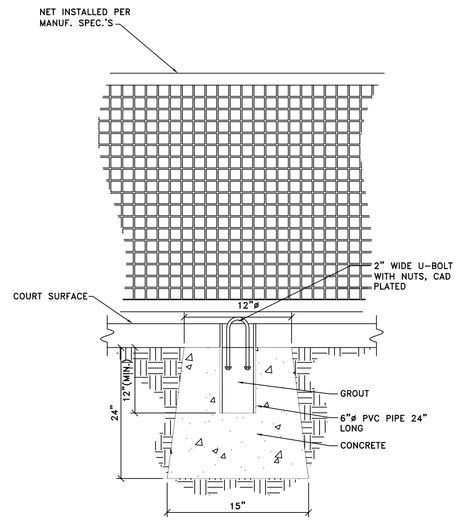

DETAIL - 9
NET CENTER ANCHOR FOOTING

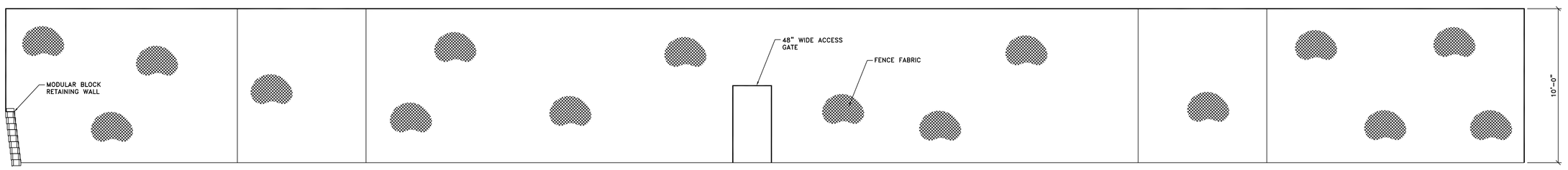

DETAIL - 10 FENCE PROFILE ACCESS (TYPICAL)
SCALE: NTS

GENERAL NOTES:

1. This Structure has been designed in accordance with the Post Tensioning Institute - "Design and Construction of Post Tension Slabs-On-Ground"; American Concrete Institute -and "Building Code Requirements for Reinforced Concrete".

2. This design is for a particular location only. Reuse in a different location is strictly prohibited and the design is void.

3. This foundation has been designed for post-tensioning system conforming to the requirements of these drawings. The design is based on soil supported stiffened grid type beam and slab foundation, and as such, will move with the soils upon which it bears.

4. Contractor shall verify dimensions and drops with the floor plans and elevations.

5. Contractor shall call Westbrook Engineering 24 hours before prepour inspection is made. Failure to request prepour inspection shall void design.

6. It is the responsibility of the builder/general contractor to inform the owner of the importance of proper drainage away from slab, maintaining moisture content of the soils around perimeter of the structure and not planting trees near the structure.

7. Detailed specifications for fencing, court nets and electric to be provided by others.

CONSTRUCTION

1. The Owner has engaged the services of a Geotechnical firm for the purpose of soils sampling and analysis, and a report of Geotechnical investigation has been provided to the Owner or Contractor, site development has included regarding and removal of existing site native soils, and placement and compaction of select structural fill performed in accordance with the Geotechnical report. However in the absence of a Geotechnical report, where the site surface soils consist of clay or clayey material, a minimum of 8 inches of surface soils shall be excavated. In the case of heavy black or brown clays, the minimum depth of soils removal is recommended at 12 inches. Proof rolling, soils consolidation, and compacting are recommended. It is the Engineer's recommendation that in accordance with any Geotechnical report, or in the absence thereof, select structural fills be provided at the location of proposed foundation construction. A minimum depth of fill material shall be specified in the Geotechnical report, or equal to the depth of surface soils excavation. Thereafter, additional fill material shall be provided to form a structural base 8" thick, or more if required for proper foundation exposure. The structural fill shall consist of Type A crushed limestone, or Type B clayey crushed gravel, in accordance with TxDot specification Item 247 for Grade 1 fill materials. Structural fill shall be placed in lifts of 8 inches, and compacted in accordance with TxDot specification Item 132 "Embankments".

2. All slabs to have a minimum of 6" layer of granular fill underneath followed by a double layer of 6 mil thick polyethylene vapor barrier. The vapor barrier shall be taped at all tears and splices.

3. Provide positive drainage away from the perimeter of the structure. Top of structure should be a minimum of 8" above adjacent earthen finished grade. Slope away from foundation should be 6" in the first five feet.

4. The tennis court finish surface shall be graded to provide drainage in accordance with USTA specifications and to match the position of the court in the larger site plan.

5. All Beam and slab sizes are minimum and shall not be decreased without prior approval from Westbrook Engineering.

6. Tendons and reinforcing bars shall be supported on chairs or similar approved support at a maximum of 4'-6" centers. All tendons shall be 270,000 psi, grade 7 wires, steel strand, greased and sheathed with a plastic sleeve. All tears in the sheathing shall be taped to prevent contact with cement.

7. Formwork construction shall be done as outlined in ACI 347, and shall be reused in accordance with ACI 347 only.

8. Concrete procedures outlined in ACI 318-83 shall be strictly followed. Particular attention shall be given to the consolidation of concrete around post-tensioning anchorages.

9. Utility lines under the slab shall pass beneath the stiffening grade beams where possible. Sleeving is recommended for utility lines which must cross through beams.

10. All 1/2" tendons shall be post-tensioned to an initial force of 33,000 lbs. each. Post tensioning shall not take place until concrete has attained minimum compression strength of 2,500 psi. Cables must be stressed 3 days to 10 days after concrete placement. This initial stress shall provide 0.08" of elongation of the tendon length for every foot of tendon length unless specified otherwise.

11. Reinforcing bars shall comply with ASTM A-615, grade 60. Reinforcing bars shall be continuous with splices lapped a minimum of 40 bar diameters.

12. Provide corner bars top and bottom at all perimeter beam corners.

13. Prepour Inspection by Westbrook Engineering is required for review of reinforcing steel, tendons, beam size and depth. Elongation inspection by Westbrook Engineering after tendons are stressed is required before tendons are trimmed and pockets are filled with non-shrink grout. Tendons are to be marked prior to stressing for verification of elongation.

14. Concrete is not to be poured if site has been disturbed by rainfall or seepage, and all beam trenches are to be free of loose soils, ponding water and trash prior to placing the concrete.

15. Beam depths may be reduced to a minimum of 14" if the grade beam is bearing on solid rock.

CONCRETE

1. Concrete shall develop a 28-day compressive stress (f'c) of at least 3,000 psi and shall be in accordance with ACI 301. Cement shall be type 1 (gray) Portland. Maximum water cement ratio shall be 7.0 and a slump range of 2 to 5 inches. Contractor shall satisfy himself that mix design is acceptable for its intended purpose.

2. Concrete shall be placed and cured in accordance with ACI 302.1R. Finish tolerance shall be in accordance with ACI 117.

3. The contractor shall encorporate fibermesh 150 with a concentration rate of 2lb/ cubic yard to the mix for slab construction (not beams) according to manufacturers specifications.

4. Testing shall be the sole responsibility of the builder, and any substandard strengths shall be reported to Westbrook Engineering.

5. While some shrinkage cracking is to be expected in the concrete, it has been shown to be significantly reduced through proper curing procedures and proper control of admixtures. Only those admixtures having specific written authorization of the design engineer shall be introduced with the concrete mix.

6. Concrete pour shall not be started unless the site temperature is 40 degrees F and rising.

7. A hard surface court should slope 0.83% (1:120) to 1.00: (1:100).

8. Specifications for concrete surface painting and treatments to be provided by others

SEE SHEET S-3 FOR PLAN VIEW

DRAWING/SPECIFICATIONS ARE COPYRIGHTED BY WESTBROOK ENGINEERING AND MAY NOT BE USED ON ANY OTHER PROJECT FOR ANY OTHER PURPOSE WITHOUT THE EXPRESSED PERMISSION OF WESTBROOK ENGINEERING LLC. © COPYRIGHT 2011

SOIL TYPE	BY	DATE	P.I.	INT. BEAM WIDTH	EXT. BEAM WIDTH	EXT. BEAM DEPTH	EXT.BM. DEPTH IN GRADE	INT. BEAM DEPTH	SLAB THICKNESS
FAT CLAYS (CH) LEAN CLAYS (CL)	FUGRO	09-30-10	55	10"	10"	30"MIN.	12" MIN.	26" MIN.	4"

WESTBROOK ENGINEERING
WESTBROOK ENGINEERING LLC
11888 Starcrest Dr. Suite-111
San Antonio, Texas 78247
(210) 490-9691 Fax(210) 490-9685

THIS DRAWING HAS BEEN APPROVED IF SEALED:

STATE OF TEXAS
JAMES EARL WESTBROOK
55678
LICENSED
PROFESSIONAL ENGINEER

James E. Westbrook

ST033-11
WESTBROOK ENGINEERING JOB NO:
11-16-11 AQ
DRAWING DATE: BY:

TENNIS COURT DESIGNS
JUMBO EVANS SPORTS COMPLEX
STRUCTURAL DETAILS

REVISIONS:
REVISION
DATE: BY:
REVISION
DATE: BY:
REVISION
DATE: BY:
REVISION
DATE: BY:
REVISION
DATE: BY:
REVISION
DATE: BY:

ADDRESS:

LOT BLOCK N.C.B.

SUBDIVISION
SPRING BRANCH, COMAL
CITY, COUNTY

SHEET NO.
S-7 of 7