Bid Documents for the

ROAD DEPARTMENT WATER QUALITY BASIN MODIFICATION
Comal County, Texas

Bid # 2016-440

COUNTY OF COMAL
STANDARD CONTRACT DOCUMENTS
TABLE OF CONTENTS

Document Number **BID # 2016-440**

Title **ROAD DEPARTMENT WATER QUALITY BASIN MODIFICATION**

INTRODUCTORY INFORMATION

	Title Page
TOC	Table of Contents
100-A	Acknowledgement Form

BIDDING REQUIREMENTS, CONTRACT FORMS, & CONDITIONS OF THE CONTRACT

Pre-Bid Information

100-B	Invitation to Bids

Instructions to Bidders

100-C	Instructions to Bidders

Bid Forms

200	Bid Form
200-A	Conflict of Interest Questionnaire
200-B	Bidder Affirmation
200-C	Non-Collusion/Anti-Trust Affidavit
200-D	Tax Record and Family Code Requirements
200-E	References
200-F	Certificate of Eligibility
200-G	Subcontractor List
200-H	Vendor Compliance Form Gov Code 2252
200-I	DBE Form (if applicable)

Agreement Form

300	Agreement

Bonds and Certificates

400-A	Performance Bond
400-B	Payment Bond
400-C	Certificate of Insurance

General Conditions

500	General Conditions
500-A	Supplemental General Conditions
500-B	Wage Rates & Payroll Reporting

Technical Specifications

700	Technical Specifications

Addenda

800	Addendum

COMAL COUNTY BID # 2016-440
ROAD DEPARTMENT WATER QUALITY BASIN MODIFICATION

The undersigned affirms that this company, corporation, firm, partnership or individual has not prepared this bid in collusion with any other bidder, and that the contents of this bid as to price, terms or conditions of said bid have not been communicated by the undersigned nor by any employee or agent to any other person engaged in this type of business prior to the official opening of this bid. The undersigned further affirms and acknowledges it has received and read all of the bid documents, addenda, and is duly authorized to execute the Contract Documents. The bid documents are composed of the following:

Section TOC	Table of Contents	Section 400-C	Certificate of Insurance (Sample)
Section 100-A	Acknowledgement Form	Section 500	General Conditions
Section 100-B	Invitation for Bids	Section 500-A	Supplemental General Conditions
Section 100-C	Instructions to Bidders	Section 500-B	Wage Rates & Payroll Reporting
Section 200	Bid Form	Section 700	Technical Specifications
Section 200-A	Conflict of Interest Questionnaire	Section 800	Addenda (if applicable)
Section 200-B	Bidder Affirmation		
Section 200-C	Non-Collusion/Anti-Trust Affidavit		
Section 200-D	Tax Record & Family Code Requirements		
Section 200-E	References		
Section 200-F	Certificate of Eligibility		
Section 200-G	Subcontractor List		
Section 200-H	Vendor Compliance Form Gov Code 2252		
Section 200-I	DBE Form		
Section 300	Agreement		
Section 400-A	Performance Bond (Sample)		
Section 400-B	Payment Bond (Sample)		

Documents are to be submitted as outlined in Section 100-C of this bid. The remaining documents are for the information of the bidder, and will form the Contract Documents between the successful bidder and the OWNER.

_____
Legal Name of Contracting Company

_____ _____
Contact Name Title

_____ _____
Mailing Address E-Mail Address

_____ _____ _____
City State Zip Code

_____ _____
Phone Number Fax Number

_____ _____
Signature Print Signature

This page must be page 1 of the bid or bid may be rejected

Following is a summary of information for this Invitation to Bid (ITB). Bidder is cautioned to refer to other sections of the Bid Documents for further details.

The County of Comal, hereafter called OWNER, is requesting sealed written Bids for furnishing all labor, materials, equipment, supervision and performing all Work required for the following Project:

BID # **2016-440**

BID NAME: **ROAD DEPARTMENT WATER QUALITY BASIN MODIFICATION**

LOCATION: 195 David Jonas Drive NB, TX 78132

The Work consists of: **MODIFY EXISITING SEDIMENTATION/FILTRATION BASIN TO A AQUALOGIC CARTRIDGE SYSTEM**

Estimated Budget: $125,000,00

Bid Documents are available at http://www.co.comal.tx.us/PUR_BIDS.htm or by calling 830-643-5850.

Sealed Bids will be received at the Comal County Purchasing Office, 1297 Church Hill Dr. New Braunfels, Texas 78130.

IMPORTANT DATES:

EVENT	LOCATION	DATE	TIME
ITB Issue/Release Date	Comal County Purchasing, 1297 Church Hill Drive, New Braunfels, Texas or www.co.comal.tx.us	June 13, 2016	
Deadline for Questions (by email only to: purrjw@co.comal.tx.us or davilj@co.comal.tx.us. Bid number must be referenced in subject line.)	Comal County Purchasing, 1297 Church Hill Drive, New Braunfels, Texas	June 21, 2016	5:00 P.M.
BID Due/Open Date	Comal County Purchasing, 1297 Church Hill Drive, New Braunfels, Texas or www.co.comal.tx.us	June 28, 2016	2:00 P.M.

ALL BIDS NOT RECEIVED PRIOR TO THE DATE AND TIMES SET FORTH ABOVE WILL NOT BE ACCEPTED FOR CONSIDERATION AND WILL BE RETURNED UNOPENED IN ACCORDANCE WITH STATE LAW.

All CONTRACTORS and Subcontractors must be registered to do business with OWNER prior to award of a Contract. Prime Contractors are responsible for ensuring that their Subcontractors are registered as vendors with the County of Comal. Registration can be done through the OWNER's Purchasing web page at http://www.co.comal.tx.us/PUR_BIDS.htm.

Bid, performance, and payment bonds, when required, may be executed on forms furnished by OWNER. Performance and Payment bonds shall be issued in an amount of one hundred percent (100%) of the Contract Amount by a solvent surety company authorized to do business in the State of Texas, and shall meet any other requirements established by law or by OWNER pursuant to applicable law.

Contract Time is of essence and all Work shall be completed within ninety (90) Calendar Days after the Notice to Proceed, in accordance with the Bid Form, Section 200. Liquidated damages are one hundred dollars ($100) per day, in accordance with the Bid Form, Section 200.

OWNER reserves the right to reject any or all Bids and to waive any minor informality in any Bid or solicitation procedure (a minor informality is one that does not affect the competitiveness of the bidders).

PROJECT MANAGER: Robert Boyd, P.E.

PURCHASING OFFICER: Ramona Womack, CPPO, CPPB

Instructions to Bidders

1. Preparation of Bid

Bid shall state location, description of the proposed Work, type of contract (either lump sum, unit price or any combination thereof) and time in which the Work is to be completed.

Each bidder shall prepare Bid in ink or typed on forms furnished by OWNER or as otherwise specified. Blank spaces for each item in Bid form shall be filled. Bidder shall submit a price for each item in Bid. In case of conflict between unit prices and extensions, unit prices shall govern. The Bid shall be executed with complete and correct name of individual, partnership, firm, corporation or other legal entity.

All CONTRACTORS and Subcontractors must be registered to do business with Owner prior to award of a Contract. Prime Contractors are responsible for ensuring that their Subcontractors are registered as vendors with the County of Comal. Registration can be done through the OWNER's Purchasing web page at http://www.co.comal.tx.us/PUR_BIDS.htm.

First-time bidders are encouraged to attend the Pre-bid Conference, if one is scheduled, to assure their understanding of OWNER's bidding and contracting requirements. When Pre-bid Conference is mandatory, all bidders are required to attend.

The Owner is a tax-exempt organization as defined by Chapter 11 of the Property Tax Code of Texas. Bid prices shall not include sales tax on materials, supplies, or equipment that are exempt in the performance of the Contract.

Bidder shall be knowledgeable of all Addenda issued and shall acknowledge all Addenda in spaces provided on Bid form. Addenda may be downloaded from http://www.co.comal.tx.us/PUR_BIDS.htm.

Bid shall include all specified items in this section and be submitted in accordance with Item No. 7 below. Any corrections to Bid shall be initialed by person signing Bid before Bid opening.

Bidder shall secure any required services that are defined as professional services under the Professional Services Procurement Act, Chapter 2254 of the Texas Government Code

Persons desiring further information or interpretation of Bid Documents shall make a written request for such information to the purchasing officer no later than five working days before Bid opening. The OWNER reserves the right to respond to inquiries with less than five days before bid due date. Interpretation of Bid Documents will be made by Addendum **only** and a copy of each Addendum will be e-mailed, mailed or faxed to each person to whom a set of Bid Documents has been furnished.

2. Estimates of Quantities (Unit Price Contracts Only)

Quantities listed in unit price Bid form are to be considered as approximate and will be used only for comparison of Bids. Payment to CONTRACTOR will be made only for actual quantities of Work performed or materials furnished in accordance with Contract and it is understood that quantities may be increased or decreased as profiled in Section 500, General Conditions.

3. Bid Documents and Site (s) of Work

Before submitting a Bid, the bidder shall carefully examine the Bid Documents, site(s) of the proposed Work, soils, and other conditions that may affect the performance of the Work. The bidder shall be satisfied as to character, quality and quantities of Work to be performed and materials to be furnished. Submission of a Bid shall indicate that the bidder has complied with these requirements.

4. Bid Guaranty

All Bids shall be accompanied by a bid guaranty in an amount of not less than five percent (5%) of the total Bid. If the total Bid amount is $100,000 or less, bidder has the option of providing a cashier's or certified check, made payable to County of Comal, or a bid bond with Power of Attorney attached, issued by a solvent surety authorized under laws of the State of Texas and acceptable to OWNER. If the total Bid amount exceeds $100,000, the only acceptable bid guaranty will be a bid bond with Power of Attorney attached, issued by a solvent surety authorized under laws of the State of Texas and acceptable to OWNER.

Bid guaranty accompanying the Bid of the apparent low bidder will be retained until Contract is awarded and successful bidder executes Contract and furnishes required bonds and insurance, after which bid guaranty will be returned to the bidder. Bid guaranty accompanying the second lowest bidder will be retained until Contract is awarded. All other bid guaranties will be returned after Bid certification.

5. Performance and Payment Bonds

Performance and payment bonds are required if bid exceeds amount shown below, and each shall be issued in an amount equal to the Contract Amount as security for the faithful performance and/or payment of all Contractors' obligations under the Contract Documents. Performance and payment bonds shall be issued by a solvent company authorized to do business in the State of Texas, and shall meet any other requirements established by law or by OWNER pursuant to applicable law. The cost for Bond premiums must be included in the bid price.

A payment bond is required for contracts over $25,000. A performance bond is required for contracts in excess of $100,000.

6. Consideration of Bid Amount

For purpose of award, after Bids are opened and read aloud, total amount bid, including accepted Bid alternates, will be considered the amount of Bid. Bid tabulations will be made available on the Comal County web site at http://www.co.comal.tx.us/PUR_BIDS.htm. OWNER reserves the right to reject any or all Bids and to waive any minor informality in any Bid or solicitation procedure (a minor informality is one that does not affect the competitiveness of the bidders).

7. Submission of Bid

Each Bid, completed and signed by person(s) authorized to bind individual, partnership, firm, corporation or any other legal entity, shall include the following:

(a) One copy of Bid form (Section 200) completed and signed.
(b) Acknowledgment of receipt of Addenda issued in spaces provided in Bid form.
(c) Required bid guaranty.
(d) Signed Acknowledgement, Affirmation, Conflict of Interest Forms, and HUB Certification Form (if applicable).
(e) Copy of Articles of Partnership or Incorporation and resolution, or corporate board minutes empowering signatory to bind bidder, attested by an officer of bidder, if required.
(f) Form 1295 Certificate of Interested Parties Form. Form may be found at https://www.ethics.state.tx.us/whatsnew/elf_info_form1295.htm
(g) Required information indicated in Bid Documents, if applicable.

Bid shall include all specified items in this section and be placed in envelope, sealed and clearly identified on outside as a Bid to OWNER, with bidder's name and address, and project name and number. Failure to submit Bid in properly marked envelope may subject bidder to disqualification. Bid may be mailed or delivered (in person or any business mail carrier of Bidder's choice) to:

County of Comal
Purchasing Office
1297 Church Hill Dr.
New Braunfels, Texas 78130

When sent by mail, Federal Express, UPS, Express Mail, or other delivery service, sealed Bid (marked as indicated above) shall be enclosed in an additional envelope clearly identified on outside as a Bid to OWNER with bidder's name

and address, Project name, and Bid date and time. It is the sole responsibility of the Bidder to ensure timely delivery of Bid. The bid is timely delivered when it is actually received at the COMAL COUNTY PURCHASING OFFICE on or before the "DUE DATE" as defined in Section 100-B, Invitation for Bids. OWNER will not be responsible for failure of service on the part of the U.S. Post Office, courier services, or any other form of delivery service chosen by the Bidder.

8. Withdrawal of Bid

A Bid may be withdrawn by a bidder, provided an authorized individual of the bidder submits a written request to withdraw the Bid prior to the time set for opening the Bids.

9. Rejection of Bids

A. The following will be cause to reject a Bid:

(1) Bids which are not signed.

(2) Bids which are not accompanied by acceptable bid guaranty with Power of Attorney attached when required.

(3) More than one Bid for same Work from an individual, firm, partnership or corporation.

(4) Reason for believing collusion exists among bidders.

(5) Sworn testimony or discovery in pending litigation with OWNER which discloses misconduct or willful refusal by contractor to comply with subject contract or instructions of OWNER.

(6) Failure to submit post-Bid information within the allotted time(s).

(7) Failure to have an authorized agent of the bidder attend the mandatory Pre-Bid Conference, if applicable.

(8) Bids received from a bidder who has been debarred or suspended by OWNER's Purchasing Officer.

(9) Bids received from a bidder when bidder or principals are currently debarred or suspended by Federal, State or Local governmental agencies. (Applicable for bid amounts equal to or in excess of $100,000)

B. The following may be cause to reject a Bid:

(1) Failure to acknowledge receipt of Addenda.

(2) Unbalanced unit price Bid. Unbalanced Bid means a Bid that is based on prices which are significantly less than cost for some Bid items and significantly more than cost for others.

(3) Poor performance in execution of work under any previous contract.

(4) Failure to achieve reasonable progress on existing contracts.

(5) Default on previous contracts or failure to execute Contract after award.

(6) Evidence of failure to pay Subcontractors, Suppliers or employees.

(7) Bids containing omissions, alterations of form, additions, qualifications or conditions not called for by OWNER, or incomplete Bids will be considered in non-compliance and may be rejected. In any case of ambiguity or lack of clarity in the Bid, OWNER reserves right to determine most advantageous Bid or to reject the Bid.

(8) Bidder owes delinquent property tax in Comal County

10. Award and Execution of Contract

OWNER will process Bids expeditiously. Pursuant 2269.055 of the Government Code, Comal County will consider the following for award: the purchase price; the experience and reputation of the vendor and the vendor's goods or services; the quality of the vendor's goods or services; the extent to which the goods or services meet the Comal County's needs; the vendor's past relationship with the Comal County or any governmental entity; the impact on the ability of the governmental entity to comply with rules relating to historically underutilized businesses; the total long-term cost to the governmental entity to acquire the vendor's goods or services; safety record, proposed personnel, and any other relevant factor specifically listed in this Bid/Proposal. Award of Contract will be to the lowest, responsible bidder meeting all requirements of the Bid Documents.

Award of Contract will occur within the period identified on the Bid form, unless mutually agreed between the parties. Purchasing Agent shall submit recommendation for award to Commissioners Court for those project awards requiring Commissioners Court action. County Judge or his/her designee will sign contract after award and submission of required documentation by bidder. Contract will not be binding upon OWNER until both parties have executed it. OWNER will process the Contract expeditiously. However, OWNER will not be liable for any delays prior to the award or execution of Contract.

The undersigned, in compliance with your invitation for bids for construction of the following Project:

ROAD DEPARTMENT WATER QUALITY BASIN MODIFICATION

for the County of Comal, Texas, having examined the Bid Documents, Drawings and Addenda, the site of the proposed Work and being familiar with all of the conditions surrounding construction of the proposed Project, having conducted all inquiries, tests and investigations deemed necessary and proper; hereby proposes to furnish all labor, permits, material, machinery, tools, supplies and equipment, and perform all Work required for construction of the Project in accordance with the Bid Documents, Drawings and Addenda within the time indicated for the unit prices of:

LUMP SUM
BID AMOUNT.....$ _____
FIGURES

_____
LUMP SUM BID AMOUNT WRITTEN – WORDS (This wording must match the bid amount shown in figures above.)

BID GUARANTY: Enclosed with this Bid is a bid guaranty meeting the requirements established in Section 200, in the amount of not less than five percent (5%) of the total Bid. Following the Bid opening, submitted Bids may not be withdrawn for a period of ninety (90) Calendar Days. Award of Contract will occur within this period, unless mutually agreed between the parties. The bid guaranty may become the property of the OWNER, or the OWNER may pursue any other action allowed by law, if: bidder withdraws a submitted Bid within the period stated above; bidder fails to submit the required post bid information within the period specified in Section 100, or any mutually agreed extension of that period; or bidder fails to execute the Contract and furnish the prescribed documentation (bonds, insurance, etc.) needed to complete execution of the Contract within ten (10) Calendar Days after notice of award, or any mutually agreed extension of that period.

TIME OF COMPLETION:
The undersigned bidder agrees to commence work within ten (10) Calendar Days after written notice as specified in a written "Notice to Proceed" to be issued by the OWNER and to **finally** complete construction of the improvements, as required by the Bid Documents, Drawings and Addenda for the Work within ninety (90) **Calendar** Days after the date of the written "Notice to Proceed."

LIQUIDATED DAMAGES: The bidder understands and agrees that the timely completion of the described Work is of the essence. The bidder and the OWNER agree that for each and every Calendar Day the Work or any portion thereof, remains incomplete after the **Final** completion date as established by the first sentence of the above paragraph, "Time of Completion," the bidder shall pay the amount of one hundred dollars ($100) per Calendar Day as liquidated damages, not as a penalty, but for delay damages to the OWNER. Such amount shall be deducted by the OWNER from any payment due to the bidder. In the event of a default or breach by the CONTRACTOR and demand is made upon the surety to complete the project, in accordance with the Bid Documents, the surety shall be liable for liquidated damages pursuant to the Contract Documents in the same manner as the CONTRACTOR would have been.

OWNER reserves the right to reject any or all Bids and to waive any minor informality in any Bid or solicitation procedure (a minor informality is one that does not affect the competitiveness of the bidders).

The undersigned acknowledges receipt of the following addenda:

Addendum No. 1 dated _____ Received _____
Addendum No. 2 dated _____ Received _____
Addendum No. 3 dated _____ Received _____

_____
Secretary, *if bidder is a Corporation

(Seal)

* Copy of Corporate Resolution and minutes with certificate of officer of bidder as to authority of signatory to bind bidder is to be signed and dated no earlier than one week before Bid date, and attached to this document.

_____
Bidder

_____
Authorized Signature

_____
Title

_____
Date

_____

_____
Address

_____
Telephone Number / FAX Number

CONFLICT OF INTEREST QUESTIONNAIRE

FORM CIQ

For vendor or other person doing business with local governmental entity

This questionnaire reflects changes made to the law by H.B. 1491, 80th Leg., Regular Session.

This questionnaire is being filed in accordance with Chapter 176, Local Government Code by a person who has a business relationship as defined by Section 176.001(1-a) with a local governmental entity and the person meets requirements under Section 176.006(a).

By law this questionnaire must be filed with the records administrator of the local governmental entity not later than the 7th business day after the date the person becomes aware of facts that require the statement to be filed. *See* Section 176.006, Local Government Code.

A person commits an offense if the person knowingly violates Section 176.006, Local Government Code. An offense under this section is a Class C misdemeanor.

OFFICE USE ONLY

Date Received

1 **Name of person who has a business relationship with local governmental entity.**

2 ☐ **Check this box if you are filing an update to a previously filed questionnaire.**

(The law requires that you file an updated completed questionnaire with the appropriate filing authority not later than the 7th business day after the date the originally filed questionnaire becomes incomplete or inaccurate.)

3 **Name of local government officer with whom filer has employment or business relationship.**

_____
Name of Officer

This section (item 3 including subparts A, B, C & D) must be completed for each officer with whom the filer has an employment or other business relationship as defined by Section 176.001(1-a), Local Government Code. Attach additional pages to this Form CIQ as necessary.

A. Is the local government officer named in this section receiving or likely to receive taxable income, other than investment income, from the filer of the questionnaire?

☐ Yes ☐ No

B. Is the filer of the questionnaire receiving or likely to receive taxable income, other than investment income, from or at the direction of the local government officer named in this section AND the taxable income is not received from the local governmental entity?

☐ Yes ☐ No

C. Is the filer of this questionnaire employed by a corporation or other business entity with respect to which the local government officer serves as an officer or director, or holds an ownership of 10 percent or more?

☐ Yes ☐ No

D. Describe each employment or business relationship with the local government officer named in this section.

4

_____ _____
Signature of person doing business with the governmental entity Date

Adopted 06/29/2007

COMAL COUNTY
BIDDER/OFFEROR'S AFFIRMATION

This sheet must be completed, signed, and returned by Bidder/Offeror.

1. Bidder/Offeror affirms that they are duly authorized to execute this Contract, that this company, corporation, firm, partnership or individual has not prepared this bid/offer in collusion with any other bidder, and that the contents of this bid/offer as to prices, terms or conditions of said bid/offer have not been communicated by the undersigned nor by any employee or director to any other person engaged in this type of business prior to the official opening of this bid/offer.

2. Bidder/Offeror hereby assigns to purchaser any and all claims for overcharges associated with this Contract which arise under the antitrust laws of the United States, 15 USCA Section 1 et seq., and which arise under the antitrust laws of the State of Texas, Tex. Bus. & Com. Code, Section 15.01, et seq.

3. Pursuant to §262.076 (a) of the Texas Local Government Code, Bidder/Offeror, hereby affirms that Bidder/Offeror:
(Please check all that are applicable)

_____ Does not own taxable property in Comal County.

_____ Does not owe any ad valorem taxes to Comal County or is not otherwise indebted to Comal County.

****
If any additional information is required regarding these requirements, please contact The Comal County Purchasing Department PRIOR to execution.
****

Bidder/Offeror Company Name _____

Bidder (Signature) _____ Date _____

Bidder (Print Name) _____ Date _____

Position with Company _____

Signature of Company Official
Authorizing the Bid/Offer _____ Date _____

Company Official
(Printed Name) _____

Official's Position _____

Corporate Vendors Shall Furnish the Following Information:

Where Incorporated _____ Charter Number _____

NON-COLLUSION/ANTI-TRUST AFFADAVIT

The Company has not given, offered to give, nor intends to give at any time hereafter, any economic opportunity, future employment, gift, loan gratuity, special discount, trip, favor, or service to a public servant in connection with the submitted response. Failure to sign this document or signing it with a false statement shall void the submitted offer or any resulting contracts.

Neither the Company or the firm, corporation, partnership, or institution represented by the Company or anyone acting for such firm, corporation, or institution has violated the antitrust laws of this State, codified in Section 15.01, et seq., Texas Business and Commerce Code, or the Federal antitrust laws, nor communicated directly or indirectly the offer made to any competitor or any other person engaged in such line of business. The Company's signature herein assigns to the County any and all claims for overcharges associated with his contract for this project, which arise under the Antitrust Laws of the United States, 15 USCA, Section 1, Et. Seq. (1973). By signing this proposal, Company certifies that if a Texas address is shown as its address, Company qualifies as a Texas Resident Bidder as defined in Rule 1 TAC 111.2.

RESPECTFULLY SUBMITTED:

Authorized Signature: _____

Printed Name: _____

Title: _____

Company Name: _____

Company's Corporate Charter No.: _____

TAX RECORD AND FAMILY CODE REQUIREMENTS

The Company's signature herein certifies that the firm is not currently delinquent in the payment of any debt owed to the State of Texas; including but not limited to franchise taxes and child support, property tax, and that any payments due the firm under this contract will be applied to that debt.

Texas Family Code Compliance Requirement:

Under Section 231.006, Family Code, the vendor or applicant certifies that the individual or business entity named in this contract, bid, or application is not ineligible to receive the specified grant, loan, or payment and acknowledges that this contract may be terminated and payment may be withheld if this certification is inaccurate. The response includes the names and Social Security Numbers of each person with a minimum of twenty-five percent (25%) ownership of the business entity submitting the response.

Firm Owner(s), Partners, Sole Proprietors, Share Holder(s) of twenty-five percent (25%) interest:

Name:	SSN:
Name:	SSN:
Name:	SSN:
Name:	SSN:

RESPECTFULLY SUBMITTED:

Authorized Signature: _____

Printed Name: _____

Title: _____

Company Name: _____

Company's Corporate Charter No.: _____

Please list three (3) references, other than Comal County, who can verify your performance as a vendor. Performance includes but shall not be limited to, sales and/or service, delivery, invoicing, and other items as may be required for Comal County to determine your firm's ability to provide the intended goods or services of this bid. The County prefers references to be from customers for whom your firm has provided the same items (sales and/or services) as those specified in this bid. Inaccurate, obsolete or negative responses form the listed references could result in rejection of your bid.

REFERENCE ONE
GOVERNMENT/COMPANY NAME:
ADDRESS:
CONTACT PERSON AND TITLE:
TELEPHONE NUMBER:
E-MAIL ADDRESS:
SCOPE OF WORK:
CONTRACT PERIOD:

REFERENCE TWO
GOVERNMENT/COMPANY NAME:
ADDRESS:
CONTACT PERSON AND TITLE:
TELEPHONE NUMBER:
E-MAIL ADDRESS:
SCOPE OF WORK:
CONTRACT PERIOD:

REFERENCE THREE
GOVERNMENT/COMPANY NAME:
ADDRESS:
CONTACT PERSON AND TITLE:
TELEPHONE NUMBER:
E-MAIL ADDRESS:
SCOPE OF WORK:
CONTRACT PERIOD:

CERTFICATE OF ELIGIBILITY

By submitting a bid or proposal I response to this solicitation, the bidder/proposer certifies that at the time of submission, he/she is not on the Federal Government's list of suspended, ineligible, or debarred contractors.

In the event of placement on the list between the time of bid/proposal submission and time of award, the bidder/ proposer will notify the Comal County Purchasing Agent. Failure to do may result in terminating this contract for default.

_____ _____

Authorized Signature Date

_____

Print Name

SUB-CONTRACTOR'S LIST

Bidders shall list below all work that will be subcontracted under this contract. Provide the company name of all sub-contractors identified by the bid due date in the space provided.

Area to be Subcontracted	Company Name/Address of Sub-Contractor	Dollar Value

VENDOR COMPLIANCE WITH RECIPROCITY ON NON-RESIDENT BIDDERS

Government Code 2252.002 provides that, in order to be awarded a contract as low bidder, a non-resident bidder must bid projects for construction, improvements, supplies or services in Texas at an amount lower than the lowest Texas resident bidder by the same amount that a Texas resident bidder would be required to underbid a non-resident bidder in order to obtain a comparable contract in the state in which the non-resident's principal place of business is located. A non-resident bidder is a contractor whose corporate offices or principal place of business is outside of the state of Texas. This requirement does not apply to a contract involving Federal funds. The appropriate blanks in Section A must be filled out by all out-of-state or non-resident bidders in order for your bid to meet specifications. The failure of out-of-state or non-resident contractors to do so will automatically disqualify that bidder. Resident bidders must check the blank in Section B.

A. Non-resident vendors in _____(give state), our principal place of business, are required to be _____ percent lower than resident bidders by state law. A copy of the statute is attached.

   Non-resident vendors in _____(give state), our principal place of business, are not required to underbid resident bidders.

B. Our principal place of business or corporate offices are in the State of Texas: _____ .

BIDDER:

_____
Company

_____
City State Zip

_____
By: (please print)

_____
Signature

_____
Title: (please print)

THIS FORM MUST BE RETURNED WITH THE BID

COMAL COUNTY

HISTORICALLY UNDERUTILIZED BUSINESSES (HUB) POLICY

I. POLICY STATEMENT

The Comal County Commissioners Court, being the policy development and budgetary control unit of county government, will strive to ensure that all businesses, regardless of size, economic, social or ethnic status have an equal opportunity to participate in the County's procurement processes. The County is committed to promote full and equal business opportunity for all businesses to supply the goods and services needed to support the mission and operations of county government, and seeks to encourage the use of certified historically underutilized businesses (HUBs) through the use of race, ethnic and gender neutral means. It is the policy of Comal County to involve certified HUBs to the greatest extent feasible in the County's procurement of goods, equipment, services and construction projects while maintaining competition and quality of work standards. The County affirms the good faith efforts of firms who recognize and practice similar business standards.

II. DEFINITIONS

Historically Underutilized Businesses (HUBs), also known as a disadvantaged business enterprise (DBE), are generally business enterprises at least 51% of which is owned, and the management and daily business operations are controlled by one or more persons who is/are socially and economically disadvantaged because of his or her identification as a member of certain groups, including women, Black Americans, Mexican Americans and other Americans of Hispanic origin, Asian Americans and American Indians.

Certified HUBs includes business enterprises that meet the definition of a HUB and who meet the certification requirements of certification agencies recognized by Comal County.

Businesses include firms, corporations, sole proprietorships, vendors, supplier's contractors, subcontractors, professionals and other similar references when referring to a business that provides goods and/or services regardless of the commodity category.

Statutory bid limit refers to the Texas Local Government Code provisions that require competitive bidding for many items valued at greater than $50,000.

III. POLICY GUIDELINES

A. Comal County, its contractors, their subcontractors and suppliers, as well as all vendors of goods, equipment and services shall not discriminate on the basis of race, color, creed, gender, age, religion, national origin, citizenship, mental or physical disability, veteran's status or political affiliation in the award and/or performance of contracts. All entities doing business or anticipating doing business with County shall support, encourage and implement affirmative steps toward a common goal of establishing equal opportunity for all citizens and businesses of the County.

B. Comal County will use and recognize the State of Texas Historically Underutilized Business certification process in conjunction with the implementation of this policy. The County may recognize other agencies' certification processes recognized by the State of Texas. Comal County reserves the right to review the certification status of any vendor applying to do business with the County. The review will be accomplished to determine the validity and authenticity of the vendor's certification as a HUB.

C. The Commissioners Court may establish HUB target goals. Through a systematic approach of soliciting quotes, bids and proposals from certified HUBs and in compliance with applicable state and federal law this policy will strive to meet those goals.

1. Target goals should consider:

   a. The availability of HUB firms within the specific category of goods or services to be procured; and
   b. The diversity of the County's population.

2. The goals should be reviewed and amended periodically.

3. The program may apply to all County procurements including construction and professional services.

4. Particular attention will be given to HUB participation on purchases in excess of the statutory bid limit.

5. Commissioners Court will use good faith efforts to meet the goals of this policy.

D. Comal County will actively seek and encourage HUBs to participate in all facets of the procurement process by:

1. Utilizing the State of Texas Historically Underutilized Business vendor database.

2. Advertising bids on the County's website and in the local newspaper.

3. Providing bid notice to minority Chambers of Commerce within Comal County, if applicable.

E. As prescribed by law, the purchase of one or more items costing in excess of the statutory bid limit must comply with the competitive bid process. Where possible, those bids will be structured to include and encourage the participation of HUB firms in the procurement process.

F. A HUB Policy statement shall be included in all specifications. The County will consider the bidder's responsiveness to the HUB Policy in the evaluation of bids and proposals. Failure to demonstrate a good faith effort to comply with the County's HUB policy may result in a bid or proposal being considered non-responsive to specifications.

G. The Purchasing Department will actively search the State Comptroller's HUB vendor list in the quotation process for purchases under the statutory bid limit.

H. Nothing in this policy shall be construed to require the County to award a contract other than to the lowest responsive bidder as required by law. This policy is narrowly tailored in accordance with applicable law.

IV. ADMINISTRATIVE GUIDELINES

A. The Purchasing Office shall serve as the County's HUB Office with responsibility for the implementation, monitoring and general operations of the HUB policy. The Purchasing Director shall serve as the County HUB Officer.

1. The HUB Officer will establish procedures to implement this policy across the full spectrum of the procurement process. The County HUB Office will periodically review with department head and elected officials regarding procurement opportunities.

2. Managing the policy and training buyers and other County personnel in order to meet County goals will be the responsibility of the HUB Office.

3. The HUB Office will cooperate with other local government entities to increase HUB participation throughout the county and region. The HUB Office is encouraged to participate in educational and other outreach programs to assist HUB firms.

4. Any complaints and/or recommendations regarding the implementation of this policy will be received and reviewed by the HUB Officer. Further, the HUB Office will audit for compliance to the HUB Policy on eligible projects after award, during the performance of the contract and after completion, while also making any recommendations to Commissioner's Court regarding any irregularities or misrepresentations of facts as they relate to compliance with the policy. The HUB Office will review documentation submitted by HUB firms in compliance with this policy.

COMAL COUNTY

FOR DISADVANTAGED BUSINESS ENTERPRISES ONLY

Disadvantaged Business Enterprises (DBE) are encouraged to participate in Comal County's bid process. The Purchasing Office will provide additional clarification of specifications, assistance with Bid Proposal Forms, and further explanation of bidding procedures to those DBEs who request it.

Representatives from DBE companies should identify themselves as such and submit a copy of the Certification.

The County recognizes the certifications of the Texas Comptroller of Public Accounts Historically Underutilized Business Program. All companies seeking information concerning DBE certification are urged to contact The Texas Comptroller of Public Accounts at 800-531-5441, extension 3-6958 or 512-463-6958.

If your company is already certified, attach a copy of your certification to this form and return with bid.

COMPANY NAME:_____

REPRESENTATIVE: _____

ADDRESS: _____

CITY, STATE, ZIP: _____

PHONE _____ FAX _____

E-MAIL _____

Indicate all that apply:

_____Minority-Owned Business Enterprise
_____Women-Owned Business Enterprise
_____Disadvantaged Business Enterprise

STATE OF TEXAS
COUNTY OF COMAL

THIS AGREEMENT is made and entered into this _____ day of _____, 2016, by and between the County of Comal, organized and existing under laws of State of Texas, acting through its County Judge or other duly authorized designee, hereinafter termed OWNER, and _____, of the City of _____, County of _____, and State of _____, hereinafter termed CONTRACTOR.

That for and in consideration of payments and agreements as set forth herein between the OWNER and CONTRACTOR hereby agrees to commence and complete the following Project:

ROAD DEPARTMENT WATER QUALITY BASIN MODIFICATION

and all Work in accordance with the Project Manual, Drawings and Addenda, attached hereto and incorporated herein by reference, as prepared and approved by OWNER in the total amount of:

$_____ _____
(Figures) **(Words)**

CONTRACTOR hereby agrees to commence Work within ten (10) Calendar days after date contained in Notice to Proceed given to CONTRACTOR, and to **finally** complete same within ninety (90) **Calendar** Days after date of written Notice to Proceed.

Waiver of any breach of this Contract shall not constitute waiver of any subsequent breach.

OWNER agrees to pay CONTRACTOR from available funds for performance of the Contract in accordance with the bid submitted therefore, subject to additions and deductions, as provided in the General Conditions of Agreement, and to make payments on account thereof as provided therein. The OWNER's obligation is payable only and solely from funds currently available for the purposes of this Agreement.

Although drawn by OWNER, this Agreement, in event of any disputes over its meaning or application, shall be interpreted fairly and reasonably, and neither more strongly for nor against either party.

OWNER

By:_____
County of Comal

_____
Date

_____
Title of Signatory

§ **CONTRACTOR**
§
§ By:_____
§
§ _____
§ Date
§ _____
§ Printed Name of Signatory
§
§ _____
§ Title of Signatory
§
§ ATTEST:
§
§ _____
§ *Secretary, if CONTRACTOR is a
§ Corporation or otherwise
§ registered with Secretary of State

*Copy of Corporate Resolution and minutes with certificate of officer of CONTRACTOR as to authority of signatory to bind CONTRACTOR is to be signed, dated no earlier than one week before the date of award of Contract, and attached to this document.

Bidding Requirements, Contract Forms & Conditions of the Contract

Performance Bond SAMPLE **Section 400-A**

STATE OF TEXAS Bond No._____

COUNTY OF Comal Project No. 2016-440

Project Name **ROAD DEPARTMENT WATER QUALITY BASIN MODIFICATION**

Know All Men By These Presents: That _____

of the City of _____, County of _____, and

State of Texas, as Principal, and _____,
a solvent company authorized under laws of the State of Texas to act as surety on bonds for principals, are held and

firmly bound unto _____County of Comal_____ (OWNER), in the penal sum of

_____ U.S. Dollars ($ _____ U.S.) for payment whereof, well and truly to be made, said Principal and Surety bind themselves and their heirs, administrators, executors, successors and assigns, jointly and severally, by these presents:

Conditions of this Bond are such that, whereas, Principal has entered into a certain written contract with OWNER, dated

the _____ day of _____, _____, which Agreement is hereby referred to and made a part hereof as fully and to the same extent as if copied at length herein.

Now, therefore, the condition of this obligation is such, that if said Principal shall faithfully perform said Agreement and shall in all respects duly and faithfully observe and perform all and singular covenants, conditions and agreements in and by said contract agreed and covenanted by Principal to be observed and performed, and according to true intent and meaning of said Agreement hereto annexed, then this obligation shall be void; otherwise to remain in full force and effect. If OWNER notifies Principal and Surety the OWNER is considering declaring Principal in default, Surety agrees to meet with OWNER and Principal no later than fifteen days after receipt of such notice to discuss methods of performing the Work of the Contract.

Provided, however, that this bond is executed pursuant to provisions of Chapter 2253, Texas Government Code as amended and all liabilities on this bond shall be determined in accordance with provisions of said Article to same extent as if it were copied at length herein.

Surety, for value received, stipulates and agrees that no change in Contract Time or Contract Amount shall in anywise affect its obligation on this bond, and it does hereby waive notice of any such change in Contract Time or Contract Amount.

In witness whereof, said Principal and Surety have signed and sealed this instrument this _____

day of _____ , _____.

_____	_____
Principal	Surety
By_____	By _____
Title_____	Title _____
Address_____	Address _____
_____	_____
_____	_____
	Telephone _____ Fax _____
	E-Mail Address _____

Name and address of Resident Agent of Surety:

Note: Bond shall be issued by a solvent Surety company authorized to do business in Texas, and shall meet any other requirements established by law or by OWNER pursuant to applicable law. A copy of surety agent's "Power of Attorney" must be attached hereto.

STATE OF TEXAS
COUNTY OF Comal

Bond No. _____
Project No. 2016-440

Project Name: **ROAD DEPARTMENT WATER QUALITY BASIN MODIFICATION**

Know All Men By These Presents: That _____
of the City of _____, County of _____ and
State of _____Texas_____, as principal, and _____
a solvent corporation authorized under laws of the State of Texas to act as surety on bonds for principals, are held and
firmly bound unto _____County of Comal_____(Owner), and all Subcontractors, workers, laborers, mechanics and suppliers as their interests may appear, all of whom shall have right to sue upon this bond in
the penal sum of _____
_____ U.S. Dollars ($_____U.S.),
for payment whereof, well and truly to be made, said Principal and Surety bind themselves and their heirs, administrators, executors, successors and assigns, jointly and severally, by these presents:

Conditions of this Bond are such that, whereas, Principal has entered into a certain written contract with Owner; dated
the _____ day of _____, _____ to which Agreement is hereby referred to and made a part hereof as fully and to the same extent as if copied in length herein.

Now, therefore, condition of this obligation is such, that if the said Principal shall well and truly pay all Subcontractors, workers, laborers, mechanics, and suppliers, all monies to them owing by said Principals for subcontracts, work, labor, equipment, supplies and materials done and furnished for the construction of improvement of said Agreement, then this obligation shall be and become null and void; otherwise to remain in full force and effect.

Provided, however, that this bond is executed pursuant to provisions of Chapter 2253, Texas Government Code as amended and all liabilities on bond shall be determined in accordance with provisions of said Article to same extent as if it were copied at length herein.

Surety, for value received, stipulates and agrees that no change in Contract Time or Contract Amount shall in anywise affect its obligation on this bond, and it does hereby waive notice of any such change in Contract Time or Contract Amount.

In witness whereof, said Principal and Surety have signed and sealed this instrument this _____
day of _____, _____.

Principal	Surety
By_____	By _____
Title_____	Title _____
Address_____	Address _____
_____	_____
_____	_____
	Telephone _____ Fax _____
	E-Mail Address _____

Name and address of the Resident Agent of Surety:

Note: Bond shall be issued by a solvent Surety company authorized to do business in Texas, and shall meet any other requirements established by law or by OWNER pursuant to applicable law. A copy of surety agent's "Power of Attorney" must be attached hereto.

CERTIFICATE OF INSURANCE

The insurance evidenced by this Certificate shall conform to the Supplemental General Conditions, Section 5.3 Insurance:

Name and Address of Agency:

_____

_____

_____

Phone:_____/_____

Name and Address of Insured:

_____

_____

Phone:_____/_____

Prime or Sub-Contractor?: _____

Name of Prime Contractor, if different from Insured:

_____

County of Comal Reference:
Project Name_____

_____

Project No.:_____
Project Location:_____

_____

Companies Affording Coverages:
Company A
Letter_____
Company B
Letter_____
Company C
Letter_____
Company D
Letter_____

COMPANY LETTER	TYPE OF INSURANCE	POLICY NUMBER	POLICY EFFECTIVE DATE (M/D/Y)	POLICY EXPIRATION DATE (M/D/Y)	LIMITS OF LIABILITY IN THOUSANDS (000) EACH
	Commercial General Liability Policy				
	___Blanket Contractural Liability				General Aggregate $_____
	___Completed Operations/ Products				Completed Operations/ Products – Aggregate $_____
	___Explosion, Collapse, Underground				Personal & Advertising Injury $_____
	___Independent Contractor's Coverage				Each Occurrence $_____
	___Aggregate Limits Per Project Form – CG 2503				
	___Additional Insured Form –CG 2010				
	___30 Day Notice of Cancellation Form – CG 0205				Deductible or Self Insured Retention $_____
	___Waiver of Subrogation Form – CG 2404				
	___Transportation of Asbestos or Lead				
	___Asbestos Abatement				
	___Lead Abatement				

Certificate of Insurance

COMPANY LETTER	TYPE OF INSURANCE	POLICY NUMBER	POLICY EFFECTIVE DATE (M/D/Y)	POLICY EXPIRATION DATE (M/D/Y)	LIMITS OF LIABILITY IN THOUSANDS (000) EACH
	Auto Liability Policy ___Any Auto ___All Owned Autos ___Non-Owned Autos ___Hired Autos ___Waiver of Subrogation-TE2046A ___30 Day Notice of Cancellation – TE0202A ___Additional Insured-TE9901B ___MCS 90				CSL $_____ Bodily Injury (Per Person) $_____ Bodily Injury (Per Accident) $_____ Property Damage (Per Accident) $_____ Deductible or Self Insured Retention $_____
	Excess Liability ___Umbrella Form ___Excess Liability Follow Form				Each Aggregate Occurrence $_____
	Worker's Compensation and Employers' Liability ___Waiver of Subrogation – WC420304 ___30 Day Notice of Cancellation – WC420601				Statutory (Each Accident) $_____ (Disease - Policy Limit) $_____ (Disease - Each Employee) $_____
	___**Builders Risk or Installation Insurance**				$_____
	Professional Liability ___30 Day Notice of Cancellation Retro-Active Date:_____				Each Claim $_____ Deductible or Self Insured Retention $_____

This is to certify that policies of insurance listed above have been issued to insured named above and are in force at this time. Notwithstanding any requirements, term or condition of any contract or other document with respect to which this certificate may be issued or may pertain, insurance afforded by policies described herein is subject to all terms, exclusions and conditions of such policies.

CERTIFICATE HOLDER:
County of Comal
Purchasing Department
1297 Church Hill Dr.
New Braunfels, Texas 78130

DATE ISSUED:_____AUTHORIZED REPRESENTATIVE_____

INSERT SPECIFICATIONS/DRAWINGS/GENERAL CONDITIONS/SUPPLEMENTARY CONDITIONS HERE

This document has important legal consequences; consultation with an attorney is encouraged with respect to its use or modification. This document should be adapted to the particular circumstances of the contemplated Project and the controlling Laws and Regulations.

STANDARD GENERAL CONDITIONS OF THE CONSTRUCTION CONTRACT

Prepared by

ENGINEERS JOINT CONTRACT DOCUMENTS COMMITTEE

and

Issued and Published Jointly by

ACEC
AMERICAN COUNCIL OF ENGINEERING COMPANIES

ASCE American Society of Civil Engineers

National Society of Professional Engineers
Professional Engineers in Private Practice

AMERICAN COUNCIL OF ENGINEERING COMPANIES

ASSOCIATED GENERAL CONTRACTORS OF AMERICA

AMERICAN SOCIETY OF CIVIL ENGINEERS

PROFESSIONAL ENGINEERS IN PRIVATE PRACTICE
A Practice Division of the
NATIONAL SOCIETY OF PROFESSIONAL ENGINEERS

Endorsed by

CONSTRUCTION SPECIFICATIONS INSTITUTE

Copyright © 2007 National Society of Professional Engineers for EJCDC. All rights reserved.

These General Conditions have been prepared for use with the Suggested Forms of Agreement Between Owner and Contractor (EJCDC C-520 or C-525, 2007 Editions). Their provisions are interrelated and a change in one may necessitate a change in the other. Comments concerning their usage are contained in the Narrative Guide to the EJCDC Construction Documents (EJCDC C-001, 2007 Edition). For guidance in the preparation of Supplementary Conditions, see Guide to the Preparation of Supplementary Conditions (EJCDC C-800, 2007 Edition).

Copyright © 2007 National Society of Professional Engineers
1420 King Street, Alexandria, VA 22314-2794
(703) 684-2882
www.nspe.org

American Council of Engineering Companies
1015 15th Street N.W., Washington, DC 20005
(202) 347-7474
www.acec.org

American Society of Civil Engineers
1801 Alexander Bell Drive, Reston, VA 20191-4400
(800) 548-2723
www.asce.org

Associated General Contractors of America
2300 Wilson Boulevard, Suite 400, Arlington, VA 22201-3308
(703) 548-3118
www.agc.org

The copyright for this EJCDC document is owned jointly by the four

Copyright © 2007 National Society of Professional Engineers for EJCDC. All rights reserved.

EJCDC sponsoring organizations and held in trust for their benefit by NSPE.

Copyright © 2007 National Society of Professional Engineers for EJCDC. All rights reserved.

STANDARD GENERAL CONDITIONS OF THE CONSTRUCTION CONTRACT

TABLE OF CONTENTS

Page

Article 1 – Definitions and Terminology 1
1.01 Defined Terms 1
1.02 Terminology 5

Article 2 – Preliminary Matters 6
2.01 Delivery of Bonds and Evidence of Insurance 6
2.02 Copies of Documents 7
2.03 Commencement of Contract Times; Notice to Proceed 7
2.04 Starting the Work 7
2.05 Before Starting Construction 7
2.06 Preconstruction Conference; Designation of Authorized Representatives 7
2.07 Initial Acceptance of Schedules 8

Article 3 – Contract Documents: Intent, Amending, Reuse 8
3.01 Intent 8
3.02 Reference Standards 8
3.03 Reporting and Resolving Discrepancies 9
3.04 Amending and Supplementing Contract Documents 10
3.05 Reuse of Documents 10
3.06 Electronic Data 10

Article 4 – Availability of Lands; Subsurface and Physical Conditions; Hazardous Environmental Conditions; Reference Points 11
4.01 Availability of Lands 11
4.02 Subsurface and Physical Conditions 11
4.03 Differing Subsurface or Physical Conditions 12
4.04 Underground Facilities 13
4.05 Reference Points 14
4.06 Hazardous Environmental Condition at Site 15

Article 5 – Bonds and Insurance 16
5.01 Performance, Payment, and Other Bonds 16
5.02 Licensed Sureties and Insurers 17
5.03 Certificates of Insurance 17
5.04 Contractor's Insurance 18
5.05 Owner's Liability Insurance 19
5.06 Property Insurance 19

Copyright © 2007 National Society of Professional Engineers for EJCDC. All rights reserved.

5.07 Waiver of Rights 21
5.08 Receipt and Application of Insurance Proceeds 22
5.09 Acceptance of Bonds and Insurance; Option to Replace 22
5.10 Partial Utilization, Acknowledgment of Property Insurer 22

Article 6 – Contractor's Responsibilities 23
6.01 Supervision and Superintendence 23
6.02 Labor; Working Hours 23
6.03 Services, Materials, and Equipment 23
6.04 Progress Schedule 24
6.05 Substitutes and "Or-Equals" 24
6.06 Concerning Subcontractors, Suppliers, and Others 26
6.07 Patent Fees and Royalties 28
6.08 Permits 28
6.09 Laws and Regulations 29
6.10 Taxes 29
6.11 Use of Site and Other Areas 29
6.12 Record Documents 30
6.13 Safety and Protection 30
6.14 Safety Representative 31
6.15 Hazard Communication Programs 31
6.16 Emergencies 32
6.17 Shop Drawings and Samples 32
6.18 Continuing the Work 34
6.19 Contractor's General Warranty and Guarantee 34
6.20 Indemnification 35
6.21 Delegation of Professional Design Services 35

Article 7 – Other Work at the Site 36
7.01 Related Work at Site 36
7.02 Coordination 37
7.03 Legal Relationships 37

Article 8 – Owner's Responsibilities 37
8.01 Communications to Contractor 37
8.02 Replacement of Engineer 37
8.03 Furnish Data 38
8.04 Pay When Due 38
8.05 Lands and Easements; Reports and Tests 38
8.06 Insurance 38
8.07 Change Orders 38
8.08 Inspections, Tests, and Approvals 38
8.09 Limitations on Owner's Responsibilities 38
8.10 Undisclosed Hazardous Environmental Condition 38
8.11 Evidence of Financial Arrangements 39

Copyright © 2007 National Society of Professional Engineers for EJCDC. All rights reserved.

8.12 Compliance with Safety Program 39

Article 9 – Engineer's Status During Construction 39
9.01 Owner's Representative 39
9.02 Visits to Site 39
9.03 Project Representative 39
9.04 Authorized Variations in Work 40
9.05 Rejecting Defective Work 40
9.06 Shop Drawings, Change Orders and Payments 40
9.07 Determinations for Unit Price Work 40
9.08 Decisions on Requirements of Contract Documents and Acceptability of Work 41
9.09 Limitations on Engineer's Authority and Responsibilities 41
9.10 Compliance with Safety Program 42

Article 10 – Changes in the Work; Claims 42
10.01 Authorized Changes in the Work 42
10.02 Unauthorized Changes in the Work 42
10.03 Execution of Change Orders 42
10.04 Notification to Surety 43
10.05 Claims 43

Article 11 – Cost of the Work; Allowances; Unit Price Work 44
11.01 Cost of the Work 44
11.02 Allowances 47
11.03 Unit Price Work 47

Article 12 – Change of Contract Price; Change of Contract Times 48
12.01 Change of Contract Price 48
12.02 Change of Contract Times 49
12.03 Delays 49

Article 13 – Tests and Inspections; Correction, Removal or Acceptance of Defective Work 50
13.01 Notice of Defects 50
13.02 Access to Work 50
13.03 Tests and Inspections 50
13.04 Uncovering Work 51
13.05 Owner May Stop the Work 52
13.06 Correction or Removal of Defective Work 52
13.07 Correction Period 52
13.08 Acceptance of Defective Work 53
13.09 Owner May Correct Defective Work 53

Article 14 – Payments to Contractor and Completion 54
14.01 Schedule of Values 54
14.02 Progress Payments 54
14.03 Contractor's Warranty of Title 57

Copyright © 2007 National Society of Professional Engineers for EJCDC. All rights reserved.

14.04 Substantial Completion 57
14.05 Partial Utilization 58
14.06 Final Inspection 59
14.07 Final Payment 59
14.08 Final Completion Delayed 60
14.09 Waiver of Claims 60

Article 15 – Suspension of Work and Termination 61
15.01 Owner May Suspend Work 61
15.02 Owner May Terminate for Cause 61
15.03 Owner May Terminate For Convenience 62
15.04 Contractor May Stop Work or Terminate 63

Article 16 – Dispute Resolution 63
16.01 Methods and Procedures 63

Article 17 – Miscellaneous 64
17.01 Giving Notice 64
17.02 Computation of Times 64
17.03 Cumulative Remedies 64
17.04 Survival of Obligations 64
17.05 Controlling Law 64
17.06 Headings 65

Copyright © 2007 National Society of Professional Engineers for EJCDC. All rights reserved.

ARTICLE 1 – DEFINITIONS AND TERMINOLOGY

1.01 *Defined Terms*

A. Wherever used in the Bidding Requirements or Contract Documents and printed with initial capital letters, the terms listed below will have the meanings indicated which are applicable to both the singular and plural thereof. In addition to terms specifically defined, terms with initial capital letters in the Contract Documents include references to identified articles and paragraphs, and the titles of other documents or forms.

1. *Addenda*—Written or graphic instruments issued prior to the opening of Bids which clarify, correct, or change the Bidding Requirements or the proposed Contract Documents.

2. *Agreement*—The written instrument which is evidence of the agreement between Owner and Contractor covering the Work.

3. *Application for Payment*—The form acceptable to Engineer which is to be used by Contractor during the course of the Work in requesting progress or final payments and which is to be accompanied by such supporting documentation as is required by the Contract Documents.

4. *Asbestos*—Any material that contains more than one percent asbestos and is friable or is releasing asbestos fibers into the air above current action levels established by the United States Occupational Safety and Health Administration.

5. *Bid*—The offer or proposal of a Bidder submitted on the prescribed form setting forth the prices for the Work to be performed.

6. *Bidder*—The individual or entity who submits a Bid directly to Owner.

7. *Bidding Documents*—The Bidding Requirements and the proposed Contract Documents (including all Addenda).

8. *Bidding Requirements*—The advertisement or invitation to bid, Instructions to Bidders, Bid security of acceptable form, if any, and the Bid Form with any supplements.

9. *Change Order*—A document recommended by Engineer which is signed by Contractor and Owner and authorizes an addition, deletion, or revision in the Work or an adjustment in the Contract Price or the Contract Times, issued on or after the Effective Date of the Agreement.

10. *Claim*—A demand or assertion by Owner or Contractor seeking an adjustment of Contract Price or Contract Times, or both, or other relief with respect to the terms of the Contract. A demand for money or services by a third party is not a Claim.

11. *Contract*—The entire and integrated written agreement between the Owner and Contractor concerning the Work. The Contract supersedes prior negotiations, representations, or agreements, whether written or oral.

Copyright © 2007 National Society of Professional Engineers for EJCDC. All rights reserved.

12. *Contract Documents*—Those items so designated in the Agreement. Only printed or hard copies of the items listed in the Agreement are Contract Documents. Approved Shop Drawings, other Contractor submittals, and the reports and drawings of subsurface and physical conditions are not Contract Documents.

13. *Contract Price*—The moneys payable by Owner to Contractor for completion of the Work in accordance with the Contract Documents as stated in the Agreement (subject to the provisions of Paragraph 11.03 in the case of Unit Price Work).

14. *Contract Times*—The number of days or the dates stated in the Agreement to: (i) achieve Milestones, if any; (ii) achieve Substantial Completion; and (iii) complete the Work so that it is ready for final payment as evidenced by Engineer's written recommendation of final payment.

15. *Contractor*—The individual or entity with whom Owner has entered into the Agreement.

16. *Cost of the Work*—See Paragraph 11.01 for definition.

17. *Drawings*—That part of the Contract Documents prepared or approved by Engineer which graphically shows the scope, extent, and character of the Work to be performed by Contractor. Shop Drawings and other Contractor submittals are not Drawings as so defined.

18. *Effective Date of the Agreement*—The date indicated in the Agreement on which it becomes effective, but if no such date is indicated, it means the date on which the Agreement is signed and delivered by the last of the two parties to sign and deliver.

19. *Engineer*—The individual or entity named as such in the Agreement.

20. *Field Order*—A written order issued by Engineer which requires minor changes in the Work but which does not involve a change in the Contract Price or the Contract Times.

21. *General Requirements*—Sections of Division 1 of the Specifications.

22. *Hazardous Environmental Condition*—The presence at the Site of Asbestos, PCBs, Petroleum, Hazardous Waste, or Radioactive Material in such quantities or circumstances that may present a substantial danger to persons or property exposed thereto.

23. *Hazardous Waste*—The term Hazardous Waste shall have the meaning provided in Section 1004 of the Solid Waste Disposal Act (42 USC Section 6903) as amended from time to time.

24. *Laws and Regulations; Laws or Regulations*—Any and all applicable laws, rules, regulations, ordinances, codes, and orders of any and all governmental bodies, agencies, authorities, and courts having jurisdiction.

Copyright © 2007 National Society of Professional Engineers for EJCDC. All rights reserved.

25. *Liens*—Charges, security interests, or encumbrances upon Project funds, real property, or personal property.

26. *Milestone*—A principal event specified in the Contract Documents relating to an intermediate completion date or time prior to Substantial Completion of all the Work.

27. *Notice of Award*—The written notice by Owner to the Successful Bidder stating that upon timely compliance by the Successful Bidder with the conditions precedent listed therein, Owner will sign and deliver the Agreement.

28. *Notice to Proceed*—A written notice given by Owner to Contractor fixing the date on which the Contract Times will commence to run and on which Contractor shall start to perform the Work under the Contract Documents.

29. *Owner*—The individual or entity with whom Contractor has entered into the Agreement and for whom the Work is to be performed.

30. *PCBs*—Polychlorinated biphenyls.

31. *Petroleum*—Petroleum, including crude oil or any fraction thereof which is liquid at standard conditions of temperature and pressure (60 degrees Fahrenheit and 14.7 pounds per square inch absolute), such as oil, petroleum, fuel oil, oil sludge, oil refuse, gasoline, kerosene, and oil mixed with other non-Hazardous Waste and crude oils.

32. *Progress Schedule*—A schedule, prepared and maintained by Contractor, describing the sequence and duration of the activities comprising the Contractor's plan to accomplish the Work within the Contract Times.

33. *Project*—The total construction of which the Work to be performed under the Contract Documents may be the whole, or a part.

34. *Project Manual*—The bound documentary information prepared for bidding and constructing the Work. A listing of the contents of the Project Manual, which may be bound in one or more volumes, is contained in the table(s) of contents.

35. *Radioactive Material*—Source, special nuclear, or byproduct material as defined by the Atomic Energy Act of 1954 (42 USC Section 2011 et seq.) as amended from time to time.

36. *Resident Project Representative*—The authorized representative of Engineer who may be assigned to the Site or any part thereof.

37. *Samples*—Physical examples of materials, equipment, or workmanship that are representative of some portion of the Work and which establish the standards by which such portion of the Work will be judged.

Copyright © 2007 National Society of Professional Engineers for EJCDC. All rights reserved.

38. *Schedule of Submittals*—A schedule, prepared and maintained by Contractor, of required submittals and the time requirements to support scheduled performance of related construction activities.

39. *Schedule of Values*—A schedule, prepared and maintained by Contractor, allocating portions of the Contract Price to various portions of the Work and used as the basis for reviewing Contractor's Applications for Payment.

40. *Shop Drawings*—All drawings, diagrams, illustrations, schedules, and other data or information which are specifically prepared or assembled by or for Contractor and submitted by Contractor to illustrate some portion of the Work.

41. *Site*—Lands or areas indicated in the Contract Documents as being furnished by Owner upon which the Work is to be performed, including rights-of-way and easements for access thereto, and such other lands furnished by Owner which are designated for the use of Contractor.

42. *Specifications*—That part of the Contract Documents consisting of written requirements for materials, equipment, systems, standards and workmanship as applied to the Work, and certain administrative requirements and procedural matters applicable thereto.

43. *Subcontractor*—An individual or entity having a direct contract with Contractor or with any other Subcontractor for the performance of a part of the Work at the Site.

44. *Substantial Completion*—The time at which the Work (or a specified part thereof) has progressed to the point where, in the opinion of Engineer, the Work (or a specified part thereof) is sufficiently complete, in accordance with the Contract Documents, so that the Work (or a specified part thereof) can be utilized for the purposes for which it is intended. The terms "substantially complete" and "substantially completed" as applied to all or part of the Work refer to Substantial Completion thereof.

45. *Successful Bidder*—The Bidder submitting a responsive Bid to whom Owner makes an award.

46. *Supplementary Conditions*—That part of the Contract Documents which amends or supplements these General Conditions.

47. *Supplier*—A manufacturer, fabricator, supplier, distributor, materialman, or vendor having a direct contract with Contractor or with any Subcontractor to furnish materials or equipment to be incorporated in the Work by Contractor or Subcontractor.

48. *Underground Facilities*—All underground pipelines, conduits, ducts, cables, wires, manholes, vaults, tanks, tunnels, or other such facilities or attachments, and any encasements containing such facilities, including those that convey electricity, gases, steam, liquid petroleum products, telephone or other communications, cable television, water, wastewater, storm water, other liquids or chemicals, or traffic or other control systems.

Copyright © 2007 National Society of Professional Engineers for EJCDC. All rights reserved.

49. *Unit Price Work*—Work to be paid for on the basis of unit prices.

50. *Work*—The entire construction or the various separately identifiable parts thereof required to be provided under the Contract Documents. Work includes and is the result of performing or providing all labor, services, and documentation necessary to produce such construction, and furnishing, installing, and incorporating all materials and equipment into such construction, all as required by the Contract Documents.

51. *Work Change Directive*—A written statement to Contractor issued on or after the Effective Date of the Agreement and signed by Owner and recommended by Engineer ordering an addition, deletion, or revision in the Work, or responding to differing or unforeseen subsurface or physical conditions under which the Work is to be performed or to emergencies. A Work Change Directive will not change the Contract Price or the Contract Times but is evidence that the parties expect that the change ordered or documented by a Work Change Directive will be incorporated in a subsequently issued Change Order following negotiations by the parties as to its effect, if any, on the Contract Price or Contract Times.

1.02 *Terminology*

A. The words and terms discussed in Paragraph 1.02.B through F are not defined but, when used in the Bidding Requirements or Contract Documents, have the indicated meaning.

B. *Intent of Certain Terms or Adjectives:*

1. The Contract Documents include the terms "as allowed," "as approved," "as ordered," "as directed" or terms of like effect or import to authorize an exercise of professional judgment by Engineer. In addition, the adjectives "reasonable," "suitable," "acceptable," "proper," "satisfactory," or adjectives of like effect or import are used to describe an action or determination of Engineer as to the Work. It is intended that such exercise of professional judgment, action, or determination will be solely to evaluate, in general, the Work for compliance with the information in the Contract Documents and with the design concept of the Project as a functioning whole as shown or indicated in the Contract Documents (unless there is a specific statement indicating otherwise). The use of any such term or adjective is not intended to and shall not be effective to assign to Engineer any duty or authority to supervise or direct the performance of the Work, or any duty or authority to undertake responsibility contrary to the provisions of Paragraph 9.09 or any other provision of the Contract Documents.

C. *Day:*

1. The word "day" means a calendar day of 24 hours measured from midnight to the next midnight.

D. *Defective:*

Copyright © 2007 National Society of Professional Engineers for EJCDC. All rights reserved.

1. The word "defective," when modifying the word "Work," refers to Work that is unsatisfactory, faulty, or deficient in that it:

   a. does not conform to the Contract Documents; or

   b. does not meet the requirements of any applicable inspection, reference standard, test, or approval referred to in the Contract Documents; or

   c. has been damaged prior to Engineer's recommendation of final payment (unless responsibility for the protection thereof has been assumed by Owner at Substantial Completion in accordance with Paragraph 14.04 or 14.05).

E. *Furnish, Install, Perform, Provide:*

1. The word "furnish," when used in connection with services, materials, or equipment, shall mean to supply and deliver said services, materials, or equipment to the Site (or some other specified location) ready for use or installation and in usable or operable condition.

2. The word "install," when used in connection with services, materials, or equipment, shall mean to put into use or place in final position said services, materials, or equipment complete and ready for intended use.

3. The words "perform" or "provide," when used in connection with services, materials, or equipment, shall mean to furnish and install said services, materials, or equipment complete and ready for intended use.

4. When "furnish," "install," "perform," or "provide" is not used in connection with services, materials, or equipment in a context clearly requiring an obligation of Contractor, "provide" is implied.

F. Unless stated otherwise in the Contract Documents, words or phrases that have a well-known technical or construction industry or trade meaning are used in the Contract Documents in accordance with such recognized meaning.

ARTICLE 2 – PRELIMINARY MATTERS

2.01 *Delivery of Bonds and Evidence of Insurance*

A. When Contractor delivers the executed counterparts of the Agreement to Owner, Contractor shall also deliver to Owner such bonds as Contractor may be required to furnish.

B. *Evidence of Insurance:* Before any Work at the Site is started, Contractor and Owner shall each deliver to the other, with copies to each additional insured identified in the Supplementary Conditions, certificates of insurance (and other evidence of insurance which either of them or any additional insured may reasonably request) which Contractor and Owner respectively are required to purchase and maintain in accordance with Article 5.

Copyright © 2007 National Society of Professional Engineers for EJCDC. All rights reserved.

2.02 *Copies of Documents*

A. Owner shall furnish to Contractor up to ten printed or hard copies of the Drawings and Project Manual. Additional copies will be furnished upon request at the cost of reproduction.

2.03 *Commencement of Contract Times; Notice to Proceed*

A. The Contract Times will commence to run on the thirtieth day after the Effective Date of the Agreement or, if a Notice to Proceed is given, on the day indicated in the Notice to Proceed. A Notice to Proceed may be given at any time within 30 days after the Effective Date of the Agreement. In no event will the Contract Times commence to run later than the sixtieth day after the day of Bid opening or the thirtieth day after the Effective Date of the Agreement, whichever date is earlier.

2.04 *Starting the Work*

A. Contractor shall start to perform the Work on the date when the Contract Times commence to run. No Work shall be done at the Site prior to the date on which the Contract Times commence to run.

2.05 *Before Starting Construction*

A. *Preliminary Schedules:* Within 10 days after the Effective Date of the Agreement (unless otherwise specified in the General Requirements), Contractor shall submit to Engineer for timely review:

1. a preliminary Progress Schedule indicating the times (numbers of days or dates) for starting and completing the various stages of the Work, including any Milestones specified in the Contract Documents;

2. a preliminary Schedule of Submittals; and

3. a preliminary Schedule of Values for all of the Work which includes quantities and prices of items which when added together equal the Contract Price and subdivides the Work into component parts in sufficient detail to serve as the basis for progress payments during performance of the Work. Such prices will include an appropriate amount of overhead and profit applicable to each item of Work.

2.06 *Preconstruction Conference; Designation of Authorized Representatives*

A. Before any Work at the Site is started, a conference attended by Owner, Contractor, Engineer, and others as appropriate will be held to establish a working understanding among the parties as to the Work and to discuss the schedules referred to in Paragraph 2.05.A, procedures for handling Shop Drawings and other submittals, processing Applications for Payment, and maintaining required records.

Copyright © 2007 National Society of Professional Engineers for EJCDC. All rights reserved.

B. At this conference Owner and Contractor each shall designate, in writing, a specific individual to act as its authorized representative with respect to the services and responsibilities under the Contract. Such individuals shall have the authority to transmit instructions, receive information, render decisions relative to the Contract, and otherwise act on behalf of each respective party.

2.07 *Initial Acceptance of Schedules*

A. At least 10 days before submission of the first Application for Payment a conference attended by Contractor, Engineer, and others as appropriate will be held to review for acceptability to Engineer as provided below the schedules submitted in accordance with Paragraph 2.05.A. Contractor shall have an additional 10 days to make corrections and adjustments and to complete and resubmit the schedules. No progress payment shall be made to Contractor until acceptable schedules are submitted to Engineer.

1. The Progress Schedule will be acceptable to Engineer if it provides an orderly progression of the Work to completion within the Contract Times. Such acceptance will not impose on Engineer responsibility for the Progress Schedule, for sequencing, scheduling, or progress of the Work, nor interfere with or relieve Contractor from Contractor's full responsibility therefor.

2. Contractor's Schedule of Submittals will be acceptable to Engineer if it provides a workable arrangement for reviewing and processing the required submittals.

3. Contractor's Schedule of Values will be acceptable to Engineer as to form and substance if it provides a reasonable allocation of the Contract Price to component parts of the Work.

ARTICLE 3 – CONTRACT DOCUMENTS: INTENT, AMENDING, REUSE

3.01 *Intent*

A. The Contract Documents are complementary; what is required by one is as binding as if required by all.

B. It is the intent of the Contract Documents to describe a functionally complete project (or part thereof) to be constructed in accordance with the Contract Documents. Any labor, documentation, services, materials, or equipment that reasonably may be inferred from the Contract Documents or from prevailing custom or trade usage as being required to produce the indicated result will be provided whether or not specifically called for, at no additional cost to Owner.

C. Clarifications and interpretations of the Contract Documents shall be issued by Engineer as provided in Article 9.

3.02 *Reference Standards*

A. Standards, Specifications, Codes, Laws, and Regulations

Copyright © 2007 National Society of Professional Engineers for EJCDC. All rights reserved.

1. Reference to standards, specifications, manuals, or codes of any technical society, organization, or association, or to Laws or Regulations, whether such reference be specific or by implication, shall mean the standard, specification, manual, code, or Laws or Regulations in effect at the time of opening of Bids (or on the Effective Date of the Agreement if there were no Bids), except as may be otherwise specifically stated in the Contract Documents.

2. No provision of any such standard, specification, manual, or code, or any instruction of a Supplier, shall be effective to change the duties or responsibilities of Owner, Contractor, or Engineer, or any of their subcontractors, consultants, agents, or employees, from those set forth in the Contract Documents. No such provision or instruction shall be effective to assign to Owner, Engineer, or any of their officers, directors, members, partners, employees, agents, consultants, or subcontractors, any duty or authority to supervise or direct the performance of the Work or any duty or authority to undertake responsibility inconsistent with the provisions of the Contract Documents.

3.03 *Reporting and Resolving Discrepancies*

A. *Reporting Discrepancies:*

1. *Contractor's Review of Contract Documents Before Starting Work*: Before undertaking each part of the Work, Contractor shall carefully study and compare the Contract Documents and check and verify pertinent figures therein and all applicable field measurements. Contractor shall promptly report in writing to Engineer any conflict, error, ambiguity, or discrepancy which Contractor discovers, or has actual knowledge of, and shall obtain a written interpretation or clarification from Engineer before proceeding with any Work affected thereby.

2. *Contractor's Review of Contract Documents During Performance of Work*: If, during the performance of the Work, Contractor discovers any conflict, error, ambiguity, or discrepancy within the Contract Documents, or between the Contract Documents and (a) any applicable Law or Regulation , (b) any standard, specification, manual, or code, or (c) any instruction of any Supplier, then Contractor shall promptly report it to Engineer in writing. Contractor shall not proceed with the Work affected thereby (except in an emergency as required by Paragraph 6.16.A) until an amendment or supplement to the Contract Documents has been issued by one of the methods indicated in Paragraph 3.04.

3. Contractor shall not be liable to Owner or Engineer for failure to report any conflict, error, ambiguity, or discrepancy in the Contract Documents unless Contractor had actual knowledge thereof.

B. *Resolving Discrepancies:*

1. Except as may be otherwise specifically stated in the Contract Documents, the provisions of the Contract Documents shall take precedence in resolving any conflict, error, ambiguity, or discrepancy between the provisions of the Contract Documents and:

Copyright © 2007 National Society of Professional Engineers for EJCDC. All rights reserved.

a. the provisions of any standard, specification, manual, or code, or the instruction of any Supplier (whether or not specifically incorporated by reference in the Contract Documents); or

b. the provisions of any Laws or Regulations applicable to the performance of the Work (unless such an interpretation of the provisions of the Contract Documents would result in violation of such Law or Regulation).

3.04 *Amending and Supplementing Contract Documents*

A. The Contract Documents may be amended to provide for additions, deletions, and revisions in the Work or to modify the terms and conditions thereof by either a Change Order or a Work Change Directive.

B. The requirements of the Contract Documents may be supplemented, and minor variations and deviations in the Work may be authorized, by one or more of the following ways:

1. A Field Order;

2. Engineer's approval of a Shop Drawing or Sample (subject to the provisions of Paragraph 6.17.D.3); or

3. Engineer's written interpretation or clarification.

3.05 *Reuse of Documents*

A. Contractor and any Subcontractor or Supplier shall not:

1. have or acquire any title to or ownership rights in any of the Drawings, Specifications, or other documents (or copies of any thereof) prepared by or bearing the seal of Engineer or its consultants, including electronic media editions; or

2. reuse any such Drawings, Specifications, other documents, or copies thereof on extensions of the Project or any other project without written consent of Owner and Engineer and specific written verification or adaptation by Engineer.

B. The prohibitions of this Paragraph 3.05 will survive final payment, or termination of the Contract. Nothing herein shall preclude Contractor from retaining copies of the Contract Documents for record purposes.

3.06 *Electronic Data*

A. Unless otherwise stated in the Supplementary Conditions, the data furnished by Owner or Engineer to Contractor, or by Contractor to Owner or Engineer, that may be relied upon are limited to the printed copies (also known as hard copies). Files in electronic media format of text, data, graphics, or other types are furnished only for the convenience of the receiving party. Any conclusion or information obtained or derived from such electronic files will be at the user's sole

Copyright © 2007 National Society of Professional Engineers for EJCDC. All rights reserved.

risk. If there is a discrepancy between the electronic files and the hard copies, the hard copies govern.

B. Because data stored in electronic media format can deteriorate or be modified inadvertently or otherwise without authorization of the data's creator, the party receiving electronic files agrees that it will perform acceptance tests or procedures within 60 days, after which the receiving party shall be deemed to have accepted the data thus transferred. Any errors detected within the 60-day acceptance period will be corrected by the transferring party.

C. When transferring documents in electronic media format, the transferring party makes no representations as to long term compatibility, usability, or readability of documents resulting from the use of software application packages, operating systems, or computer hardware differing from those used by the data's creator.

ARTICLE 4 – AVAILABILITY OF LANDS; SUBSURFACE AND PHYSICAL CONDITIONS; HAZARDOUS ENVIRONMENTAL CONDITIONS; REFERENCE POINTS

4.01 *Availability of Lands*

A. Owner shall furnish the Site. Owner shall notify Contractor of any encumbrances or restrictions not of general application but specifically related to use of the Site with which Contractor must comply in performing the Work. Owner will obtain in a timely manner and pay for easements for permanent structures or permanent changes in existing facilities. If Contractor and Owner are unable to agree on entitlement to or on the amount or extent, if any, of any adjustment in the Contract Price or Contract Times, or both, as a result of any delay in Owner's furnishing the Site or a part thereof, Contractor may make a Claim therefor as provided in Paragraph 10.05.

B. Upon reasonable written request, Owner shall furnish Contractor with a current statement of record legal title and legal description of the lands upon which the Work is to be performed and Owner's interest therein as necessary for giving notice of or filing a mechanic's or construction lien against such lands in accordance with applicable Laws and Regulations.

C. Contractor shall provide for all additional lands and access thereto that may be required for temporary construction facilities or storage of materials and equipment.

4.02 *Subsurface and Physical Conditions*

A. *Reports and Drawings:* The Supplementary Conditions identify:

1. those reports known to Owner of explorations and tests of subsurface conditions at or contiguous to the Site; and

2. those drawings known to Owner of physical conditions relating to existing surface or subsurface structures at the Site (except Underground Facilities).

B. *Limited Reliance by Contractor on Technical Data Authorized:* Contractor may rely upon the accuracy of the "technical data" contained in such reports and drawings, but such reports and

Copyright © 2007 National Society of Professional Engineers for EJCDC. All rights reserved.

drawings are not Contract Documents. Such "technical data" is identified in the Supplementary Conditions. Except for such reliance on such "technical data," Contractor may not rely upon or make any claim against Owner or Engineer, or any of their officers, directors, members, partners, employees, agents, consultants, or subcontractors with respect to:

1. the completeness of such reports and drawings for Contractor's purposes, including, but not limited to, any aspects of the means, methods, techniques, sequences, and procedures of construction to be employed by Contractor, and safety precautions and programs incident thereto; or

2. other data, interpretations, opinions, and information contained in such reports or shown or indicated in such drawings; or

3. any Contractor interpretation of or conclusion drawn from any "technical data" or any such other data, interpretations, opinions, or information.

4.03 *Differing Subsurface or Physical Conditions*

A. *Notice:* If Contractor believes that any subsurface or physical condition that is uncovered or revealed either:

1. is of such a nature as to establish that any "technical data" on which Contractor is entitled to rely as provided in Paragraph 4.02 is materially inaccurate; or

2. is of such a nature as to require a change in the Contract Documents; or

3. differs materially from that shown or indicated in the Contract Documents; or

4. is of an unusual nature, and differs materially from conditions ordinarily encountered and generally recognized as inherent in work of the character provided for in the Contract Documents;

then Contractor shall, promptly after becoming aware thereof and before further disturbing the subsurface or physical conditions or performing any Work in connection therewith (except in an emergency as required by Paragraph 6.16.A), notify Owner and Engineer in writing about such condition. Contractor shall not further disturb such condition or perform any Work in connection therewith (except as aforesaid) until receipt of written order to do so.

B. *Engineer's Review*: After receipt of written notice as required by Paragraph 4.03.A, Engineer will promptly review the pertinent condition, determine the necessity of Owner's obtaining additional exploration or tests with respect thereto, and advise Owner in writing (with a copy to Contractor) of Engineer's findings and conclusions.

C. *Possible Price and Times Adjustments:*

1. The Contract Price or the Contract Times, or both, will be equitably adjusted to the extent that the existence of such differing subsurface or physical condition causes an increase or

Copyright © 2007 National Society of Professional Engineers for EJCDC. All rights reserved.

decrease in Contractor's cost of, or time required for, performance of the Work; subject, however, to the following:

a. such condition must meet any one or more of the categories described in Paragraph 4.03.A; and

b. with respect to Work that is paid for on a unit price basis, any adjustment in Contract Price will be subject to the provisions of Paragraphs 9.07 and 11.03.

2. Contractor shall not be entitled to any adjustment in the Contract Price or Contract Times if:

a. Contractor knew of the existence of such conditions at the time Contractor made a final commitment to Owner with respect to Contract Price and Contract Times by the submission of a Bid or becoming bound under a negotiated contract; or

b. the existence of such condition could reasonably have been discovered or revealed as a result of any examination, investigation, exploration, test, or study of the Site and contiguous areas required by the Bidding Requirements or Contract Documents to be conducted by or for Contractor prior to Contractor's making such final commitment; or

c. Contractor failed to give the written notice as required by Paragraph 4.03.A.

3. If Owner and Contractor are unable to agree on entitlement to or on the amount or extent, if any, of any adjustment in the Contract Price or Contract Times, or both, a Claim may be made therefor as provided in Paragraph 10.05. However, neither Owner or Engineer, or any of their officers, directors, members, partners, employees, agents, consultants, or subcontractors shall be liable to Contractor for any claims, costs, losses, or damages (including but not limited to all fees and charges of engineers, architects, attorneys, and other professionals and all court or arbitration or other dispute resolution costs) sustained by Contractor on or in connection with any other project or anticipated project.

4.04 *Underground Facilities*

A. *Shown or Indicated:* The information and data shown or indicated in the Contract Documents with respect to existing Underground Facilities at or contiguous to the Site is based on information and data furnished to Owner or Engineer by the owners of such Underground Facilities, including Owner, or by others. Unless it is otherwise expressly provided in the Supplementary Conditions:

1. Owner and Engineer shall not be responsible for the accuracy or completeness of any such information or data provided by others; and

2. the cost of all of the following will be included in the Contract Price, and Contractor shall have full responsibility for:

a. reviewing and checking all such information and data;

Copyright © 2007 National Society of Professional Engineers for EJCDC. All rights reserved.

b. locating all Underground Facilities shown or indicated in the Contract Documents;

c. coordination of the Work with the owners of such Underground Facilities, including Owner, during construction; and

d. the safety and protection of all such Underground Facilities and repairing any damage thereto resulting from the Work.

B. *Not Shown or Indicated:*

1. If an Underground Facility is uncovered or revealed at or contiguous to the Site which was not shown or indicated, or not shown or indicated with reasonable accuracy in the Contract Documents, Contractor shall, promptly after becoming aware thereof and before further disturbing conditions affected thereby or performing any Work in connection therewith (except in an emergency as required by Paragraph 6.16.A), identify the owner of such Underground Facility and give written notice to that owner and to Owner and Engineer. Engineer will promptly review the Underground Facility and determine the extent, if any, to which a change is required in the Contract Documents to reflect and document the consequences of the existence or location of the Underground Facility. During such time, Contractor shall be responsible for the safety and protection of such Underground Facility.

2. If Engineer concludes that a change in the Contract Documents is required, a Work Change Directive or a Change Order will be issued to reflect and document such consequences. An equitable adjustment shall be made in the Contract Price or Contract Times, or both, to the extent that they are attributable to the existence or location of any Underground Facility that was not shown or indicated or not shown or indicated with reasonable accuracy in the Contract Documents and that Contractor did not know of and could not reasonably have been expected to be aware of or to have anticipated. If Owner and Contractor are unable to agree on entitlement to or on the amount or extent, if any, of any such adjustment in Contract Price or Contract Times, Owner or Contractor may make a Claim therefor as provided in Paragraph 10.05.

4.05 *Reference Points*

A. Owner shall provide engineering surveys to establish reference points for construction which in Engineer's judgment are necessary to enable Contractor to proceed with the Work. Contractor shall be responsible for laying out the Work, shall protect and preserve the established reference points and property monuments, and shall make no changes or relocations without the prior written approval of Owner. Contractor shall report to Engineer whenever any reference point or property monument is lost or destroyed or requires relocation because of necessary changes in grades or locations, and shall be responsible for the accurate replacement or relocation of such reference points or property monuments by professionally qualified personnel.

Copyright © 2007 National Society of Professional Engineers for EJCDC. All rights reserved.

4.06 *Hazardous Environmental Condition at Site*

A. *Reports and Drawings:* The Supplementary Conditions identify those reports and drawings known to Owner relating to Hazardous Environmental Conditions that have been identified at the Site.

B. *Limited Reliance by Contractor on Technical Data Authorized:* Contractor may rely upon the accuracy of the "technical data" contained in such reports and drawings, but such reports and drawings are not Contract Documents. Such "technical data" is identified in the Supplementary Conditions. Except for such reliance on such "technical data," Contractor may not rely upon or make any claim against Owner or Engineer, or any of their officers, directors, members, partners, employees, agents, consultants, or subcontractors with respect to:

1. the completeness of such reports and drawings for Contractor's purposes, including, but not limited to, any aspects of the means, methods, techniques, sequences and procedures of construction to be employed by Contractor and safety precautions and programs incident thereto; or

2. other data, interpretations, opinions and information contained in such reports or shown or indicated in such drawings; or

3. any Contractor interpretation of or conclusion drawn from any "technical data" or any such other data, interpretations, opinions or information.

C. Contractor shall not be responsible for any Hazardous Environmental Condition uncovered or revealed at the Site which was not shown or indicated in Drawings or Specifications or identified in the Contract Documents to be within the scope of the Work. Contractor shall be responsible for a Hazardous Environmental Condition created with any materials brought to the Site by Contractor, Subcontractors, Suppliers, or anyone else for whom Contractor is responsible.

D. If Contractor encounters a Hazardous Environmental Condition or if Contractor or anyone for whom Contractor is responsible creates a Hazardous Environmental Condition, Contractor shall immediately: (i) secure or otherwise isolate such condition; (ii) stop all Work in connection with such condition and in any area affected thereby (except in an emergency as required by Paragraph 6.16.A); and (iii) notify Owner and Engineer (and promptly thereafter confirm such notice in writing). Owner shall promptly consult with Engineer concerning the necessity for Owner to retain a qualified expert to evaluate such condition or take corrective action, if any. Promptly after consulting with Engineer, Owner shall take such actions as are necessary to permit Owner to timely obtain required permits and provide Contractor the written notice required by Paragraph 4.06.E.

E. Contractor shall not be required to resume Work in connection with such condition or in any affected area until after Owner has obtained any required permits related thereto and delivered written notice to Contractor: (i) specifying that such condition and any affected area is or has been rendered safe for the resumption of Work; or (ii) specifying any special conditions under which such Work may be resumed safely. If Owner and Contractor cannot agree as to entitlement

Copyright © 2007 National Society of Professional Engineers for EJCDC. All rights reserved.

to or on the amount or extent, if any, of any adjustment in Contract Price or Contract Times, or both, as a result of such Work stoppage or such special conditions under which Work is agreed to be resumed by Contractor, either party may make a Claim therefor as provided in Paragraph 10.05.

F. If after receipt of such written notice Contractor does not agree to resume such Work based on a reasonable belief it is unsafe, or does not agree to resume such Work under such special conditions, then Owner may order the portion of the Work that is in the area affected by such condition to be deleted from the Work. If Owner and Contractor cannot agree as to entitlement to or on the amount or extent, if any, of an adjustment in Contract Price or Contract Times as a result of deleting such portion of the Work, then either party may make a Claim therefor as provided in Paragraph 10.05. Owner may have such deleted portion of the Work performed by Owner's own forces or others in accordance with Article 7.

G. To the fullest extent permitted by Laws and Regulations, Owner shall indemnify and hold harmless Contractor, Subcontractors, and Engineer, and the officers, directors, members, partners, employees, agents, consultants, and subcontractors of each and any of them from and against all claims, costs, losses, and damages (including but not limited to all fees and charges of engineers, architects, attorneys, and other professionals and all court or arbitration or other dispute resolution costs) arising out of or relating to a Hazardous Environmental Condition, provided that such Hazardous Environmental Condition: (i) was not shown or indicated in the Drawings or Specifications or identified in the Contract Documents to be included within the scope of the Work, and (ii) was not created by Contractor or by anyone for whom Contractor is responsible. Nothing in this Paragraph 4.06.G shall obligate Owner to indemnify any individual or entity from and against the consequences of that individual's or entity's own negligence.

H. To the fullest extent permitted by Laws and Regulations, Contractor shall indemnify and hold harmless Owner and Engineer, and the officers, directors, members, partners, employees, agents, consultants, and subcontractors of each and any of them from and against all claims, costs, losses, and damages (including but not limited to all fees and charges of engineers, architects, attorneys, and other professionals and all court or arbitration or other dispute resolution costs) arising out of or relating to a Hazardous Environmental Condition created by Contractor or by anyone for whom Contractor is responsible. Nothing in this Paragraph 4.06.H shall obligate Contractor to indemnify any individual or entity from and against the consequences of that individual's or entity's own negligence.

I. The provisions of Paragraphs 4.02, 4.03, and 4.04 do not apply to a Hazardous Environmental Condition uncovered or revealed at the Site.

ARTICLE 5 – BONDS AND INSURANCE

5.01 *Performance, Payment, and Other Bonds*

A. Contractor shall furnish performance and payment bonds, each in an amount at least equal to the Contract Price as security for the faithful performance and payment of all of Contractor's obligations under the Contract Documents. These bonds shall remain in effect until one year after

Copyright © 2007 National Society of Professional Engineers for EJCDC. All rights reserved.

the date when final payment becomes due or until completion of the correction period specified in Paragraph 13.07, whichever is later, except as provided otherwise by Laws or Regulations or by the Contract Documents. Contractor shall also furnish such other bonds as are required by the Contract Documents.

B. All bonds shall be in the form prescribed by the Contract Documents except as provided otherwise by Laws or Regulations, and shall be executed by such sureties as are named in the list of "Companies Holding Certificates of Authority as Acceptable Sureties on Federal Bonds and as Acceptable Reinsuring Companies" as published in Circular 570 (amended) by the Financial Management Service, Surety Bond Branch, U.S. Department of the Treasury. All bonds signed by an agent or attorney-in-fact must be accompanied by a certified copy of that individual's authority to bind the surety. The evidence of authority shall show that it is effective on the date the agent or attorney-in-fact signed each bond.

C. If the surety on any bond furnished by Contractor is declared bankrupt or becomes insolvent or its right to do business is terminated in any state where any part of the Project is located or it ceases to meet the requirements of Paragraph 5.01.B, Contractor shall promptly notify Owner and Engineer and shall, within 20 days after the event giving rise to such notification, provide another bond and surety, both of which shall comply with the requirements of Paragraphs 5.01.B and 5.02.

5.02 *Licensed Sureties and Insurers*

A. All bonds and insurance required by the Contract Documents to be purchased and maintained by Owner or Contractor shall be obtained from surety or insurance companies that are duly licensed or authorized in the jurisdiction in which the Project is located to issue bonds or insurance policies for the limits and coverages so required. Such surety and insurance companies shall also meet such additional requirements and qualifications as may be provided in the Supplementary Conditions.

5.03 *Certificates of Insurance*

A. Contractor shall deliver to Owner, with copies to each additional insured and loss payee identified in the Supplementary Conditions, certificates of insurance (and other evidence of insurance requested by Owner or any other additional insured) which Contractor is required to purchase and maintain.

B. Owner shall deliver to Contractor, with copies to each additional insured and loss payee identified in the Supplementary Conditions, certificates of insurance (and other evidence of insurance requested by Contractor or any other additional insured) which Owner is required to purchase and maintain.

C. Failure of Owner to demand such certificates or other evidence of Contractor's full compliance with these insurance requirements or failure of Owner to identify a deficiency in compliance from the evidence provided shall not be construed as a waiver of Contractor's obligation to maintain such insurance.

Copyright © 2007 National Society of Professional Engineers for EJCDC. All rights reserved.

D. Owner does not represent that insurance coverage and limits established in this Contract necessarily will be adequate to protect Contractor.

E. The insurance and insurance limits required herein shall not be deemed as a limitation on Contractor's liability under the indemnities granted to Owner in the Contract Documents.

5.04 *Contractor's Insurance*

A. Contractor shall purchase and maintain such insurance as is appropriate for the Work being performed and as will provide protection from claims set forth below which may arise out of or result from Contractor's performance of the Work and Contractor's other obligations under the Contract Documents, whether it is to be performed by Contractor, any Subcontractor or Supplier, or by anyone directly or indirectly employed by any of them to perform any of the Work, or by anyone for whose acts any of them may be liable:

1. claims under workers' compensation, disability benefits, and other similar employee benefit acts;

2. claims for damages because of bodily injury, occupational sickness or disease, or death of Contractor's employees;

3. claims for damages because of bodily injury, sickness or disease, or death of any person other than Contractor's employees;

4. claims for damages insured by reasonably available personal injury liability coverage which are sustained:

   a. by any person as a result of an offense directly or indirectly related to the employment of such person by Contractor, or

   b. by any other person for any other reason;

5. claims for damages, other than to the Work itself, because of injury to or destruction of tangible property wherever located, including loss of use resulting therefrom; and

6. claims for damages because of bodily injury or death of any person or property damage arising out of the ownership, maintenance or use of any motor vehicle.

B. The policies of insurance required by this Paragraph 5.04 shall:

1. with respect to insurance required by Paragraphs 5.04.A.3 through 5.04.A.6 inclusive, be written on an occurrence basis, include as additional insureds (subject to any customary exclusion regarding professional liability) Owner and Engineer, and any other individuals or entities identified in the Supplementary Conditions, all of whom shall be listed as additional insureds, and include coverage for the respective officers, directors, members, partners, employees, agents, consultants, and subcontractors of each and any of all such additional

Copyright © 2007 National Society of Professional Engineers for EJCDC. All rights reserved.

insureds, and the insurance afforded to these additional insureds shall provide primary coverage for all claims covered thereby;

2. include at least the specific coverages and be written for not less than the limits of liability provided in the Supplementary Conditions or required by Laws or Regulations, whichever is greater;

3. include contractual liability insurance covering Contractor's indemnity obligations under Paragraphs 6.11 and 6.20;

4. contain a provision or endorsement that the coverage afforded will not be canceled, materially changed or renewal refused until at least 30 days prior written notice has been given to Owner and Contractor and to each other additional insured identified in the Supplementary Conditions to whom a certificate of insurance has been issued (and the certificates of insurance furnished by the Contractor pursuant to Paragraph 5.03 will so provide);

5. remain in effect at least until final payment and at all times thereafter when Contractor may be correcting, removing, or replacing defective Work in accordance with Paragraph 13.07; and

6. include completed operations coverage:

   a. Such insurance shall remain in effect for two years after final payment.

   b. Contractor shall furnish Owner and each other additional insured identified in the Supplementary Conditions, to whom a certificate of insurance has been issued, evidence satisfactory to Owner and any such additional insured of continuation of such insurance at final payment and one year thereafter.

5.05 *Owner's Liability Insurance*

A. In addition to the insurance required to be provided by Contractor under Paragraph 5.04, Owner, at Owner's option, may purchase and maintain at Owner's expense Owner's own liability insurance as will protect Owner against claims which may arise from operations under the Contract Documents.

5.06 *Property Insurance*

A. Unless otherwise provided in the Supplementary Conditions, Owner shall purchase and maintain property insurance upon the Work at the Site in the amount of the full replacement cost thereof (subject to such deductible amounts as may be provided in the Supplementary Conditions or required by Laws and Regulations). This insurance shall:

1. include the interests of Owner, Contractor, Subcontractors, and Engineer, and any other individuals or entities identified in the Supplementary Conditions, and the officers, directors, members, partners, employees, agents, consultants, and subcontractors of each and any of

Copyright © 2007 National Society of Professional Engineers for EJCDC. All rights reserved.

them, each of whom is deemed to have an insurable interest and shall be listed as a loss payee;

2. be written on a Builder's Risk "all-risk" policy form that shall at least include insurance for physical loss or damage to the Work, temporary buildings, falsework, and materials and equipment in transit, and shall insure against at least the following perils or causes of loss: fire, lightning, extended coverage, theft, vandalism and malicious mischief, earthquake, collapse, debris removal, demolition occasioned by enforcement of Laws and Regulations, water damage (other than that caused by flood), and such other perils or causes of loss as may be specifically required by the Supplementary Conditions.

3. include expenses incurred in the repair or replacement of any insured property (including but not limited to fees and charges of engineers and architects);

4. cover materials and equipment stored at the Site or at another location that was agreed to in writing by Owner prior to being incorporated in the Work, provided that such materials and equipment have been included in an Application for Payment recommended by Engineer;

5. allow for partial utilization of the Work by Owner;

6. include testing and startup; and

7. be maintained in effect until final payment is made unless otherwise agreed to in writing by Owner, Contractor, and Engineer with 30 days written notice to each other loss payee to whom a certificate of insurance has been issued.

B. Owner shall purchase and maintain such equipment breakdown insurance or additional property insurance as may be required by the Supplementary Conditions or Laws and Regulations which will include the interests of Owner, Contractor, Subcontractors, and Engineer, and any other individuals or entities identified in the Supplementary Conditions, and the officers, directors, members, partners, employees, agents, consultants and subcontractors of each and any of them, each of whom is deemed to have an insurable interest and shall be listed as a loss payee.

C. All the policies of insurance (and the certificates or other evidence thereof) required to be purchased and maintained in accordance with this Paragraph 5.06 will contain a provision or endorsement that the coverage afforded will not be canceled or materially changed or renewal refused until at least 30 days prior written notice has been given to Owner and Contractor and to each other loss payee to whom a certificate of insurance has been issued and will contain waiver provisions in accordance with Paragraph 5.07.

D. Owner shall not be responsible for purchasing and maintaining any property insurance specified in this Paragraph 5.06 to protect the interests of Contractor, Subcontractors, or others in the Work to the extent of any deductible amounts that are identified in the Supplementary Conditions. The risk of loss within such identified deductible amount will be borne by Contractor, Subcontractors, or others suffering any such loss, and if any of them wishes property insurance coverage within the limits of such amounts, each may purchase and maintain it at the purchaser's own expense.

Copyright © 2007 National Society of Professional Engineers for EJCDC. All rights reserved.

E. If Contractor requests in writing that other special insurance be included in the property insurance policies provided under this Paragraph 5.06, Owner shall, if possible, include such insurance, and the cost thereof will be charged to Contractor by appropriate Change Order. Prior to commencement of the Work at the Site, Owner shall in writing advise Contractor whether or not such other insurance has been procured by Owner.

5.07 *Waiver of Rights*

A. Owner and Contractor intend that all policies purchased in accordance with Paragraph 5.06 will protect Owner, Contractor, Subcontractors, and Engineer, and all other individuals or entities identified in the Supplementary Conditions as loss payees (and the officers, directors, members, partners, employees, agents, consultants, and subcontractors of each and any of them) in such policies and will provide primary coverage for all losses and damages caused by the perils or causes of loss covered thereby. All such policies shall contain provisions to the effect that in the event of payment of any loss or damage the insurers will have no rights of recovery against any of the insureds or loss payees thereunder. Owner and Contractor waive all rights against each other and their respective officers, directors, members, partners, employees, agents, consultants and subcontractors of each and any of them for all losses and damages caused by, arising out of or resulting from any of the perils or causes of loss covered by such policies and any other property insurance applicable to the Work; and, in addition, waive all such rights against Subcontractors and Engineer, and all other individuals or entities identified in the Supplementary Conditions as loss payees (and the officers, directors, members, partners, employees, agents, consultants, and subcontractors of each and any of them) under such policies for losses and damages so caused. None of the above waivers shall extend to the rights that any party making such waiver may have to the proceeds of insurance held by Owner as trustee or otherwise payable under any policy so issued.

B. Owner waives all rights against Contractor, Subcontractors, and Engineer, and the officers, directors, members, partners, employees, agents, consultants and subcontractors of each and any of them for:

1. loss due to business interruption, loss of use, or other consequential loss extending beyond direct physical loss or damage to Owner's property or the Work caused by, arising out of, or resulting from fire or other perils whether or not insured by Owner; and

2. loss or damage to the completed Project or part thereof caused by, arising out of, or resulting from fire or other insured peril or cause of loss covered by any property insurance maintained on the completed Project or part thereof by Owner during partial utilization pursuant to Paragraph 14.05, after Substantial Completion pursuant to Paragraph 14.04, or after final payment pursuant to Paragraph 14.07.

C. Any insurance policy maintained by Owner covering any loss, damage or consequential loss referred to in Paragraph 5.07.B shall contain provisions to the effect that in the event of payment of any such loss, damage, or consequential loss, the insurers will have no rights of recovery against Contractor, Subcontractors, or Engineer, and the officers, directors, members, partners, employees, agents, consultants and subcontractors of each and any of them.

Copyright © 2007 National Society of Professional Engineers for EJCDC. All rights reserved.

5.08 *Receipt and Application of Insurance Proceeds*

A. Any insured loss under the policies of insurance required by Paragraph 5.06 will be adjusted with Owner and made payable to Owner as fiduciary for the loss payees, as their interests may appear, subject to the requirements of any applicable mortgage clause and of Paragraph 5.08.B. Owner shall deposit in a separate account any money so received and shall distribute it in accordance with such agreement as the parties in interest may reach. If no other special agreement is reached, the damaged Work shall be repaired or replaced, the moneys so received applied on account thereof, and the Work and the cost thereof covered by an appropriate Change Order.

B. Owner as fiduciary shall have power to adjust and settle any loss with the insurers unless one of the parties in interest shall object in writing within 15 days after the occurrence of loss to Owner's exercise of this power. If such objection be made, Owner as fiduciary shall make settlement with the insurers in accordance with such agreement as the parties in interest may reach. If no such agreement among the parties in interest is reached, Owner as fiduciary shall adjust and settle the loss with the insurers and, if required in writing by any party in interest, Owner as fiduciary shall give bond for the proper performance of such duties.

5.09 *Acceptance of Bonds and Insurance; Option to Replace*

A. If either Owner or Contractor has any objection to the coverage afforded by or other provisions of the bonds or insurance required to be purchased and maintained by the other party in accordance with Article 5 on the basis of non-conformance with the Contract Documents, the objecting party shall so notify the other party in writing within 10 days after receipt of the certificates (or other evidence requested) required by Paragraph 2.01.B. Owner and Contractor shall each provide to the other such additional information in respect of insurance provided as the other may reasonably request. If either party does not purchase or maintain all of the bonds and insurance required of such party by the Contract Documents, such party shall notify the other party in writing of such failure to purchase prior to the start of the Work, or of such failure to maintain prior to any change in the required coverage. Without prejudice to any other right or remedy, the other party may elect to obtain equivalent bonds or insurance to protect such other party's interests at the expense of the party who was required to provide such coverage, and a Change Order shall be issued to adjust the Contract Price accordingly.

5.10 *Partial Utilization, Acknowledgment of Property Insurer*

A. If Owner finds it necessary to occupy or use a portion or portions of the Work prior to Substantial Completion of all the Work as provided in Paragraph 14.05, no such use or occupancy shall commence before the insurers providing the property insurance pursuant to Paragraph 5.06 have acknowledged notice thereof and in writing effected any changes in coverage necessitated thereby. The insurers providing the property insurance shall consent by endorsement on the policy or policies, but the property insurance shall not be canceled or permitted to lapse on account of any such partial use or occupancy.

Copyright © 2007 National Society of Professional Engineers for EJCDC. All rights reserved.

ARTICLE 6 – CONTRACTOR'S RESPONSIBILITIES

6.01 *Supervision and Superintendence*

A. Contractor shall supervise, inspect, and direct the Work competently and efficiently, devoting such attention thereto and applying such skills and expertise as may be necessary to perform the Work in accordance with the Contract Documents. Contractor shall be solely responsible for the means, methods, techniques, sequences, and procedures of construction. Contractor shall not be responsible for the negligence of Owner or Engineer in the design or specification of a specific means, method, technique, sequence, or procedure of construction which is shown or indicated in and expressly required by the Contract Documents.

B. At all times during the progress of the Work, Contractor shall assign a competent resident superintendent who shall not be replaced without written notice to Owner and Engineer except under extraordinary circumstances.

6.02 *Labor; Working Hours*

A. Contractor shall provide competent, suitably qualified personnel to survey and lay out the Work and perform construction as required by the Contract Documents. Contractor shall at all times maintain good discipline and order at the Site.

B. Except as otherwise required for the safety or protection of persons or the Work or property at the Site or adjacent thereto, and except as otherwise stated in the Contract Documents, all Work at the Site shall be performed during regular working hours. Contractor will not permit the performance of Work on a Saturday, Sunday, or any legal holiday without Owner's written consent (which will not be unreasonably withheld) given after prior written notice to Engineer.

6.03 *Services, Materials, and Equipment*

A. Unless otherwise specified in the Contract Documents, Contractor shall provide and assume full responsibility for all services, materials, equipment, labor, transportation, construction equipment and machinery, tools, appliances, fuel, power, light, heat, telephone, water, sanitary facilities, temporary facilities, and all other facilities and incidentals necessary for the performance, testing, start-up, and completion of the Work.

B. All materials and equipment incorporated into the Work shall be as specified or, if not specified, shall be of good quality and new, except as otherwise provided in the Contract Documents. All special warranties and guarantees required by the Specifications shall expressly run to the benefit of Owner. If required by Engineer, Contractor shall furnish satisfactory evidence (including reports of required tests) as to the source, kind, and quality of materials and equipment.

C. All materials and equipment shall be stored, applied, installed, connected, erected, protected, used, cleaned, and conditioned in accordance with instructions of the applicable Supplier, except as otherwise may be provided in the Contract Documents.

Copyright © 2007 National Society of Professional Engineers for EJCDC. All rights reserved.

6.04 *Progress Schedule*

A. Contractor shall adhere to the Progress Schedule established in accordance with Paragraph 2.07 as it may be adjusted from time to time as provided below.

1. Contractor shall submit to Engineer for acceptance (to the extent indicated in Paragraph 2.07) proposed adjustments in the Progress Schedule that will not result in changing the Contract Times. Such adjustments will comply with any provisions of the General Requirements applicable thereto.

2. Proposed adjustments in the Progress Schedule that will change the Contract Times shall be submitted in accordance with the requirements of Article 12. Adjustments in Contract Times may only be made by a Change Order.

6.05 *Substitutes and "Or-Equals"*

A. Whenever an item of material or equipment is specified or described in the Contract Documents by using the name of a proprietary item or the name of a particular Supplier, the specification or description is intended to establish the type, function, appearance, and quality required. Unless the specification or description contains or is followed by words reading that no like, equivalent, or "or-equal" item or no substitution is permitted, other items of material or equipment or material or equipment of other Suppliers may be submitted to Engineer for review under the circumstances described below.

1. *"Or-Equal" Items:* If in Engineer's sole discretion an item of material or equipment proposed by Contractor is functionally equal to that named and sufficiently similar so that no change in related Work will be required, it may be considered by Engineer as an "or-equal" item, in which case review and approval of the proposed item may, in Engineer's sole discretion, be accomplished without compliance with some or all of the requirements for approval of proposed substitute items. For the purposes of this Paragraph 6.05.A.1, a proposed item of material or equipment will be considered functionally equal to an item so named if:

a. in the exercise of reasonable judgment Engineer determines that:

1) it is at least equal in materials of construction, quality, durability, appearance, strength, and design characteristics;

2) it will reliably perform at least equally well the function and achieve the results imposed by the design concept of the completed Project as a functioning whole; and

3) it has a proven record of performance and availability of responsive service.

b. Contractor certifies that, if approved and incorporated into the Work:

1) there will be no increase in cost to the Owner or increase in Contract Times; and

Copyright © 2007 National Society of Professional Engineers for EJCDC. All rights reserved.

2) it will conform substantially to the detailed requirements of the item named in the Contract Documents.

2. *Substitute Items:*

a. If in Engineer's sole discretion an item of material or equipment proposed by Contractor does not qualify as an "or-equal" item under Paragraph 6.05.A.1, it will be considered a proposed substitute item.

b. Contractor shall submit sufficient information as provided below to allow Engineer to determine if the item of material or equipment proposed is essentially equivalent to that named and an acceptable substitute therefor. Requests for review of proposed substitute items of material or equipment will not be accepted by Engineer from anyone other than Contractor.

c. The requirements for review by Engineer will be as set forth in Paragraph 6.05.A.2.d, as supplemented by the General Requirements, and as Engineer may decide is appropriate under the circumstances.

d. Contractor shall make written application to Engineer for review of a proposed substitute item of material or equipment that Contractor seeks to furnish or use. The application:

1) shall certify that the proposed substitute item will:

a) perform adequately the functions and achieve the results called for by the general design,

b) be similar in substance to that specified, and

c) be suited to the same use as that specified;

2) will state:

a) the extent, if any, to which the use of the proposed substitute item will prejudice Contractor's achievement of Substantial Completion on time,

b) whether use of the proposed substitute item in the Work will require a change in any of the Contract Documents (or in the provisions of any other direct contract with Owner for other work on the Project) to adapt the design to the proposed substitute item, and

c) whether incorporation or use of the proposed substitute item in connection with the Work is subject to payment of any license fee or royalty;

3) will identify:

a) all variations of the proposed substitute item from that specified, and

Copyright © 2007 National Society of Professional Engineers for EJCDC. All rights reserved.

b) available engineering, sales, maintenance, repair, and replacement services; and

4) shall contain an itemized estimate of all costs or credits that will result directly or indirectly from use of such substitute item, including costs of redesign and claims of other contractors affected by any resulting change.

B. *Substitute Construction Methods or Procedures:* If a specific means, method, technique, sequence, or procedure of construction is expressly required by the Contract Documents, Contractor may furnish or utilize a substitute means, method, technique, sequence, or procedure of construction approved by Engineer. Contractor shall submit sufficient information to allow Engineer, in Engineer's sole discretion, to determine that the substitute proposed is equivalent to that expressly called for by the Contract Documents. The requirements for review by Engineer will be similar to those provided in Paragraph 6.05.A.2.

C. *Engineer's Evaluation:* Engineer will be allowed a reasonable time within which to evaluate each proposal or submittal made pursuant to Paragraphs 6.05.A and 6.05.B. Engineer may require Contractor to furnish additional data about the proposed substitute item. Engineer will be the sole judge of acceptability. No "or equal" or substitute will be ordered, installed or utilized until Engineer's review is complete, which will be evidenced by a Change Order in the case of a substitute and an approved Shop Drawing for an "or equal." Engineer will advise Contractor in writing of any negative determination.

D. *Special Guarantee:* Owner may require Contractor to furnish at Contractor's expense a special performance guarantee or other surety with respect to any substitute.

E. *Engineer's Cost Reimbursement*: Engineer will record Engineer's costs in evaluating a substitute proposed or submitted by Contractor pursuant to Paragraphs 6.05.A.2 and 6.05.B. Whether or not Engineer approves a substitute so proposed or submitted by Contractor, Contractor shall reimburse Owner for the reasonable charges of Engineer for evaluating each such proposed substitute. Contractor shall also reimburse Owner for the reasonable charges of Engineer for making changes in the Contract Documents (or in the provisions of any other direct contract with Owner) resulting from the acceptance of each proposed substitute.

F. *Contractor's Expense*: Contractor shall provide all data in support of any proposed substitute or "or-equal" at Contractor's expense.

6.06 *Concerning Subcontractors, Suppliers, and Others*

A. Contractor shall not employ any Subcontractor, Supplier, or other individual or entity (including those acceptable to Owner as indicated in Paragraph 6.06.B), whether initially or as a replacement, against whom Owner may have reasonable objection. Contractor shall not be required to employ any Subcontractor, Supplier, or other individual or entity to furnish or perform any of the Work against whom Contractor has reasonable objection.

B. If the Supplementary Conditions require the identity of certain Subcontractors, Suppliers, or other individuals or entities to be submitted to Owner in advance for acceptance by Owner by a

Copyright © 2007 National Society of Professional Engineers for EJCDC. All rights reserved.

specified date prior to the Effective Date of the Agreement, and if Contractor has submitted a list thereof in accordance with the Supplementary Conditions, Owner's acceptance (either in writing or by failing to make written objection thereto by the date indicated for acceptance or objection in the Bidding Documents or the Contract Documents) of any such Subcontractor, Supplier, or other individual or entity so identified may be revoked on the basis of reasonable objection after due investigation. Contractor shall submit an acceptable replacement for the rejected Subcontractor, Supplier, or other individual or entity, and the Contract Price will be adjusted by the difference in the cost occasioned by such replacement, and an appropriate Change Order will be issued. No acceptance by Owner of any such Subcontractor, Supplier, or other individual or entity, whether initially or as a replacement, shall constitute a waiver of any right of Owner or Engineer to reject defective Work.

C. Contractor shall be fully responsible to Owner and Engineer for all acts and omissions of the Subcontractors, Suppliers, and other individuals or entities performing or furnishing any of the Work just as Contractor is responsible for Contractor's own acts and omissions. Nothing in the Contract Documents:

1. shall create for the benefit of any such Subcontractor, Supplier, or other individual or entity any contractual relationship between Owner or Engineer and any such Subcontractor, Supplier or other individual or entity; nor

2. shall create any obligation on the part of Owner or Engineer to pay or to see to the payment of any moneys due any such Subcontractor, Supplier, or other individual or entity except as may otherwise be required by Laws and Regulations.

D. Contractor shall be solely responsible for scheduling and coordinating the Work of Subcontractors, Suppliers, and other individuals or entities performing or furnishing any of the Work under a direct or indirect contract with Contractor.

E. Contractor shall require all Subcontractors, Suppliers, and such other individuals or entities performing or furnishing any of the Work to communicate with Engineer through Contractor.

F. The divisions and sections of the Specifications and the identifications of any Drawings shall not control Contractor in dividing the Work among Subcontractors or Suppliers or delineating the Work to be performed by any specific trade.

G. All Work performed for Contractor by a Subcontractor or Supplier will be pursuant to an appropriate agreement between Contractor and the Subcontractor or Supplier which specifically binds the Subcontractor or Supplier to the applicable terms and conditions of the Contract Documents for the benefit of Owner and Engineer. Whenever any such agreement is with a Subcontractor or Supplier who is listed as a loss payee on the property insurance provided in Paragraph 5.06, the agreement between the Contractor and the Subcontractor or Supplier will contain provisions whereby the Subcontractor or Supplier waives all rights against Owner, Contractor, Engineer, and all other individuals or entities identified in the Supplementary Conditions to be listed as insureds or loss payees (and the officers, directors, members, partners, employees, agents, consultants, and subcontractors of each and any of them) for all losses and

Copyright © 2007 National Society of Professional Engineers for EJCDC. All rights reserved.

damages caused by, arising out of, relating to, or resulting from any of the perils or causes of loss covered by such policies and any other property insurance applicable to the Work. If the insurers on any such policies require separate waiver forms to be signed by any Subcontractor or Supplier, Contractor will obtain the same.

6.07 *Patent Fees and Royalties*

A. Contractor shall pay all license fees and royalties and assume all costs incident to the use in the performance of the Work or the incorporation in the Work of any invention, design, process, product, or device which is the subject of patent rights or copyrights held by others. If a particular invention, design, process, product, or device is specified in the Contract Documents for use in the performance of the Work and if, to the actual knowledge of Owner or Engineer, its use is subject to patent rights or copyrights calling for the payment of any license fee or royalty to others, the existence of such rights shall be disclosed by Owner in the Contract Documents.

B. To the fullest extent permitted by Laws and Regulations, Owner shall indemnify and hold harmless Contractor, and its officers, directors, members, partners, employees, agents, consultants, and subcontractors from and against all claims, costs, losses, and damages (including but not limited to all fees and charges of engineers, architects, attorneys, and other professionals, and all court or arbitration or other dispute resolution costs) arising out of or relating to any infringement of patent rights or copyrights incident to the use in the performance of the Work or resulting from the incorporation in the Work of any invention, design, process, product, or device specified in the Contract Documents, but not identified as being subject to payment of any license fee or royalty to others required by patent rights or copyrights.

C. To the fullest extent permitted by Laws and Regulations, Contractor shall indemnify and hold harmless Owner and Engineer, and the officers, directors, members, partners, employees, agents, consultants and subcontractors of each and any of them from and against all claims, costs, losses, and damages (including but not limited to all fees and charges of engineers, architects, attorneys, and other professionals and all court or arbitration or other dispute resolution costs) arising out of or relating to any infringement of patent rights or copyrights incident to the use in the performance of the Work or resulting from the incorporation in the Work of any invention, design, process, product, or device not specified in the Contract Documents.

6.08 *Permits*

A. Unless otherwise provided in the Supplementary Conditions, Contractor shall obtain and pay for all construction permits and licenses. Owner shall assist Contractor, when necessary, in obtaining such permits and licenses. Contractor shall pay all governmental charges and inspection fees necessary for the prosecution of the Work which are applicable at the time of opening of Bids, or, if there are no Bids, on the Effective Date of the Agreement. Owner shall pay all charges of utility owners for connections for providing permanent service to the Work.

Copyright © 2007 National Society of Professional Engineers for EJCDC. All rights reserved.

6.09 *Laws and Regulations*

A. Contractor shall give all notices required by and shall comply with all Laws and Regulations applicable to the performance of the Work. Except where otherwise expressly required by applicable Laws and Regulations, neither Owner nor Engineer shall be responsible for monitoring Contractor's compliance with any Laws or Regulations.

B. If Contractor performs any Work knowing or having reason to know that it is contrary to Laws or Regulations, Contractor shall bear all claims, costs, losses, and damages (including but not limited to all fees and charges of engineers, architects, attorneys, and other professionals and all court or arbitration or other dispute resolution costs) arising out of or relating to such Work. However, it shall not be Contractor's responsibility to make certain that the Specifications and Drawings are in accordance with Laws and Regulations, but this shall not relieve Contractor of Contractor's obligations under Paragraph 3.03.

C. Changes in Laws or Regulations not known at the time of opening of Bids (or, on the Effective Date of the Agreement if there were no Bids) having an effect on the cost or time of performance of the Work shall be the subject of an adjustment in Contract Price or Contract Times. If Owner and Contractor are unable to agree on entitlement to or on the amount or extent, if any, of any such adjustment, a Claim may be made therefor as provided in Paragraph 10.05.

6.10 *Taxes*

A. Contractor shall pay all sales, consumer, use, and other similar taxes required to be paid by Contractor in accordance with the Laws and Regulations of the place of the Project which are applicable during the performance of the Work.

6.11 *Use of Site and Other Areas*

A. *Limitation on Use of Site and Other Areas:*

1. Contractor shall confine construction equipment, the storage of materials and equipment, and the operations of workers to the Site and other areas permitted by Laws and Regulations, and shall not unreasonably encumber the Site and other areas with construction equipment or other materials or equipment. Contractor shall assume full responsibility for any damage to any such land or area, or to the owner or occupant thereof, or of any adjacent land or areas resulting from the performance of the Work.

2. Should any claim be made by any such owner or occupant because of the performance of the Work, Contractor shall promptly settle with such other party by negotiation or otherwise resolve the claim by arbitration or other dispute resolution proceeding or at law.

3. To the fullest extent permitted by Laws and Regulations, Contractor shall indemnify and hold harmless Owner and Engineer, and the officers, directors, members, partners, employees, agents, consultants and subcontractors of each and any of them from and against all claims, costs, losses, and damages (including but not limited to all fees and charges of engineers,

Copyright © 2007 National Society of Professional Engineers for EJCDC. All rights reserved.

architects, attorneys, and other professionals and all court or arbitration or other dispute resolution costs) arising out of or relating to any claim or action, legal or equitable, brought by any such owner or occupant against Owner, Engineer, or any other party indemnified hereunder to the extent caused by or based upon Contractor's performance of the Work.

B. *Removal of Debris During Performance of the Work:* During the progress of the Work Contractor shall keep the Site and other areas free from accumulations of waste materials, rubbish, and other debris. Removal and disposal of such waste materials, rubbish, and other debris shall conform to applicable Laws and Regulations.

C. *Cleaning:* Prior to Substantial Completion of the Work Contractor shall clean the Site and the Work and make it ready for utilization by Owner. At the completion of the Work Contractor shall remove from the Site all tools, appliances, construction equipment and machinery, and surplus materials and shall restore to original condition all property not designated for alteration by the Contract Documents.

D. *Loading Structures:* Contractor shall not load nor permit any part of any structure to be loaded in any manner that will endanger the structure, nor shall Contractor subject any part of the Work or adjacent property to stresses or pressures that will endanger it.

6.12 *Record Documents*

A. Contractor shall maintain in a safe place at the Site one record copy of all Drawings, Specifications, Addenda, Change Orders, Work Change Directives, Field Orders, and written interpretations and clarifications in good order and annotated to show changes made during construction. These record documents together with all approved Samples and a counterpart of all approved Shop Drawings will be available to Engineer for reference. Upon completion of the Work, these record documents, Samples, and Shop Drawings will be delivered to Engineer for Owner.

6.13 *Safety and Protection*

A. Contractor shall be solely responsible for initiating, maintaining and supervising all safety precautions and programs in connection with the Work. Such responsibility does not relieve Subcontractors of their responsibility for the safety of persons or property in the performance of their work, nor for compliance with applicable safety Laws and Regulations. Contractor shall take all necessary precautions for the safety of, and shall provide the necessary protection to prevent damage, injury or loss to:

1. all persons on the Site or who may be affected by the Work;

2. all the Work and materials and equipment to be incorporated therein, whether in storage on or off the Site; and

Copyright © 2007 National Society of Professional Engineers for EJCDC. All rights reserved.

3. other property at the Site or adjacent thereto, including trees, shrubs, lawns, walks, pavements, roadways, structures, utilities, and Underground Facilities not designated for removal, relocation, or replacement in the course of construction.

B. Contractor shall comply with all applicable Laws and Regulations relating to the safety of persons or property, or to the protection of persons or property from damage, injury, or loss; and shall erect and maintain all necessary safeguards for such safety and protection. Contractor shall notify owners of adjacent property and of Underground Facilities and other utility owners when prosecution of the Work may affect them, and shall cooperate with them in the protection, removal, relocation, and replacement of their property.

C. Contractor shall comply with the applicable requirements of Owner's safety programs, if any. The Supplementary Conditions identify any Owner's safety programs that are applicable to the Work.

D. Contractor shall inform Owner and Engineer of the specific requirements of Contractor's safety program with which Owner's and Engineer's employees and representatives must comply while at the Site.

E. All damage, injury, or loss to any property referred to in Paragraph 6.13.A.2 or 6.13.A.3 caused, directly or indirectly, in whole or in part, by Contractor, any Subcontractor, Supplier, or any other individual or entity directly or indirectly employed by any of them to perform any of the Work, or anyone for whose acts any of them may be liable, shall be remedied by Contractor (except damage or loss attributable to the fault of Drawings or Specifications or to the acts or omissions of Owner or Engineer or anyone employed by any of them, or anyone for whose acts any of them may be liable, and not attributable, directly or indirectly, in whole or in part, to the fault or negligence of Contractor or any Subcontractor, Supplier, or other individual or entity directly or indirectly employed by any of them).

F. Contractor's duties and responsibilities for safety and for protection of the Work shall continue until such time as all the Work is completed and Engineer has issued a notice to Owner and Contractor in accordance with Paragraph 14.07.B that the Work is acceptable (except as otherwise expressly provided in connection with Substantial Completion).

6.14 *Safety Representative*

A. Contractor shall designate a qualified and experienced safety representative at the Site whose duties and responsibilities shall be the prevention of accidents and the maintaining and supervising of safety precautions and programs.

6.15 *Hazard Communication Programs*

A. Contractor shall be responsible for coordinating any exchange of material safety data sheets or other hazard communication information required to be made available to or exchanged between or among employers at the Site in accordance with Laws or Regulations.

Copyright © 2007 National Society of Professional Engineers for EJCDC. All rights reserved.

6.16 *Emergencies*

A. In emergencies affecting the safety or protection of persons or the Work or property at the Site or adjacent thereto, Contractor is obligated to act to prevent threatened damage, injury, or loss. Contractor shall give Engineer prompt written notice if Contractor believes that any significant changes in the Work or variations from the Contract Documents have been caused thereby or are required as a result thereof. If Engineer determines that a change in the Contract Documents is required because of the action taken by Contractor in response to such an emergency, a Work Change Directive or Change Order will be issued.

6.17 *Shop Drawings and Samples*

A. Contractor shall submit Shop Drawings and Samples to Engineer for review and approval in accordance with the accepted Schedule of Submittals (as required by Paragraph 2.07). Each submittal will be identified as Engineer may require.

1. *Shop Drawings:*

a. Submit number of copies specified in the General Requirements.

b. Data shown on the Shop Drawings will be complete with respect to quantities, dimensions, specified performance and design criteria, materials, and similar data to show Engineer the services, materials, and equipment Contractor proposes to provide and to enable Engineer to review the information for the limited purposes required by Paragraph 6.17.D.

2. *Samples:*

a. Submit number of Samples specified in the Specifications.

b. Clearly identify each Sample as to material, Supplier, pertinent data such as catalog numbers, the use for which intended and other data as Engineer may require to enable Engineer to review the submittal for the limited purposes required by Paragraph 6.17.D.

B. Where a Shop Drawing or Sample is required by the Contract Documents or the Schedule of Submittals, any related Work performed prior to Engineer's review and approval of the pertinent submittal will be at the sole expense and responsibility of Contractor.

C. *Submittal Procedures:*

1. Before submitting each Shop Drawing or Sample, Contractor shall have:

a. reviewed and coordinated each Shop Drawing or Sample with other Shop Drawings and Samples and with the requirements of the Work and the Contract Documents;

Copyright © 2007 National Society of Professional Engineers for EJCDC. All rights reserved.

b. determined and verified all field measurements, quantities, dimensions, specified performance and design criteria, installation requirements, materials, catalog numbers, and similar information with respect thereto;

c. determined and verified the suitability of all materials offered with respect to the indicated application, fabrication, shipping, handling, storage, assembly, and installation pertaining to the performance of the Work; and

d. determined and verified all information relative to Contractor's responsibilities for means, methods, techniques, sequences, and procedures of construction, and safety precautions and programs incident thereto.

2. Each submittal shall bear a stamp or specific written certification that Contractor has satisfied Contractor's obligations under the Contract Documents with respect to Contractor's review and approval of that submittal.

3. With each submittal, Contractor shall give Engineer specific written notice of any variations that the Shop Drawing or Sample may have from the requirements of the Contract Documents. This notice shall be both a written communication separate from the Shop Drawings or Sample submittal; and, in addition, by a specific notation made on each Shop Drawing or Sample submitted to Engineer for review and approval of each such variation.

D. *Engineer's Review:*

1. Engineer will provide timely review of Shop Drawings and Samples in accordance with the Schedule of Submittals acceptable to Engineer. Engineer's review and approval will be only to determine if the items covered by the submittals will, after installation or incorporation in the Work, conform to the information given in the Contract Documents and be compatible with the design concept of the completed Project as a functioning whole as indicated by the Contract Documents.

2. Engineer's review and approval will not extend to means, methods, techniques, sequences, or procedures of construction (except where a particular means, method, technique, sequence, or procedure of construction is specifically and expressly called for by the Contract Documents) or to safety precautions or programs incident thereto. The review and approval of a separate item as such will not indicate approval of the assembly in which the item functions.

3. Engineer's review and approval shall not relieve Contractor from responsibility for any variation from the requirements of the Contract Documents unless Contractor has complied with the requirements of Paragraph 6.17.C.3 and Engineer has given written approval of each such variation by specific written notation thereof incorporated in or accompanying the Shop Drawing or Sample. Engineer's review and approval shall not relieve Contractor from responsibility for complying with the requirements of Paragraph 6.17.C.1.

E. *Resubmittal Procedures:*

Copyright © 2007 National Society of Professional Engineers for EJCDC. All rights reserved.

1. Contractor shall make corrections required by Engineer and shall return the required number of corrected copies of Shop Drawings and submit, as required, new Samples for review and approval. Contractor shall direct specific attention in writing to revisions other than the corrections called for by Engineer on previous submittals.

6.18 *Continuing the Work*

A. Contractor shall carry on the Work and adhere to the Progress Schedule during all disputes or disagreements with Owner. No Work shall be delayed or postponed pending resolution of any disputes or disagreements, except as permitted by Paragraph 15.04 or as Owner and Contractor may otherwise agree in writing.

6.19 *Contractor's General Warranty and Guarantee*

A. Contractor warrants and guarantees to Owner that all Work will be in accordance with the Contract Documents and will not be defective. Engineer and its officers, directors, members, partners, employees, agents, consultants, and subcontractors shall be entitled to rely on representation of Contractor's warranty and guarantee.

B. Contractor's warranty and guarantee hereunder excludes defects or damage caused by:

1. abuse, modification, or improper maintenance or operation by persons other than Contractor, Subcontractors, Suppliers, or any other individual or entity for whom Contractor is responsible; or

2. normal wear and tear under normal usage.

C. Contractor's obligation to perform and complete the Work in accordance with the Contract Documents shall be absolute. None of the following will constitute an acceptance of Work that is not in accordance with the Contract Documents or a release of Contractor's obligation to perform the Work in accordance with the Contract Documents:

1. observations by Engineer;

2. recommendation by Engineer or payment by Owner of any progress or final payment;

3. the issuance of a certificate of Substantial Completion by Engineer or any payment related thereto by Owner;

4. use or occupancy of the Work or any part thereof by Owner;

5. any review and approval of a Shop Drawing or Sample submittal or the issuance of a notice of acceptability by Engineer;

6. any inspection, test, or approval by others; or

7. any correction of defective Work by Owner.

Copyright © 2007 National Society of Professional Engineers for EJCDC. All rights reserved.

6.20 *Indemnification*

A. To the fullest extent permitted by Laws and Regulations, Contractor shall indemnify and hold harmless Owner and Engineer, and the officers, directors, members, partners, employees, agents, consultants and subcontractors of each and any of them from and against all claims, costs, losses, and damages (including but not limited to all fees and charges of engineers, architects, attorneys, and other professionals and all court or arbitration or other dispute resolution costs) arising out of or relating to the performance of the Work, provided that any such claim, cost, loss, or damage is attributable to bodily injury, sickness, disease, or death, or to injury to or destruction of tangible property (other than the Work itself), including the loss of use resulting therefrom but only to the extent caused by any negligent act or omission of Contractor, any Subcontractor, any Supplier, or any individual or entity directly or indirectly employed by any of them to perform any of the Work or anyone for whose acts any of them may be liable .

B. In any and all claims against Owner or Engineer or any of their officers, directors, members, partners, employees, agents, consultants, or subcontractors by any employee (or the survivor or personal representative of such employee) of Contractor, any Subcontractor, any Supplier, or any individual or entity directly or indirectly employed by any of them to perform any of the Work, or anyone for whose acts any of them may be liable, the indemnification obligation under Paragraph 6.20.A shall not be limited in any way by any limitation on the amount or type of damages, compensation, or benefits payable by or for Contractor or any such Subcontractor, Supplier, or other individual or entity under workers' compensation acts, disability benefit acts, or other employee benefit acts.

C. The indemnification obligations of Contractor under Paragraph 6.20.A shall not extend to the liability of Engineer and Engineer's officers, directors, members, partners, employees, agents, consultants and subcontractors arising out of:

1. the preparation or approval of, or the failure to prepare or approve maps, Drawings, opinions, reports, surveys, Change Orders, designs, or Specifications; or

2. giving directions or instructions, or failing to give them, if that is the primary cause of the injury or damage.

6.21 *Delegation of Professional Design Services*

A. Contractor will not be required to provide professional design services unless such services are specifically required by the Contract Documents for a portion of the Work or unless such services are required to carry out Contractor's responsibilities for construction means, methods, techniques, sequences and procedures. Contractor shall not be required to provide professional services in violation of applicable law.

B. If professional design services or certifications by a design professional related to systems, materials or equipment are specifically required of Contractor by the Contract Documents, Owner and Engineer will specify all performance and design criteria that such services must satisfy. Contractor shall cause such services or certifications to be provided by a properly licensed

Copyright © 2007 National Society of Professional Engineers for EJCDC. All rights reserved.

professional, whose signature and seal shall appear on all drawings, calculations, specifications, certifications, Shop Drawings and other submittals prepared by such professional. Shop Drawings and other submittals related to the Work designed or certified by such professional, if prepared by others, shall bear such professional's written approval when submitted to Engineer.

C. Owner and Engineer shall be entitled to rely upon the adequacy, accuracy and completeness of the services, certifications or approvals performed by such design professionals, provided Owner and Engineer have specified to Contractor all performance and design criteria that such services must satisfy.

D. Pursuant to this Paragraph 6.21, Engineer's review and approval of design calculations and design drawings will be only for the limited purpose of checking for conformance with performance and design criteria given and the design concept expressed in the Contract Documents. Engineer's review and approval of Shop Drawings and other submittals (except design calculations and design drawings) will be only for the purpose stated in Paragraph 6.17.D.1.

E. Contractor shall not be responsible for the adequacy of the performance or design criteria required by the Contract Documents.

ARTICLE 7 – OTHER WORK AT THE SITE

7.01 *Related Work at Site*

A. Owner may perform other work related to the Project at the Site with Owner's employees, or through other direct contracts therefor, or have other work performed by utility owners. If such other work is not noted in the Contract Documents, then:

1. written notice thereof will be given to Contractor prior to starting any such other work; and

2. if Owner and Contractor are unable to agree on entitlement to or on the amount or extent, if any, of any adjustment in the Contract Price or Contract Times that should be allowed as a result of such other work, a Claim may be made therefor as provided in Paragraph 10.05.

B. Contractor shall afford each other contractor who is a party to such a direct contract, each utility owner, and Owner, if Owner is performing other work with Owner's employees, proper and safe access to the Site, provide a reasonable opportunity for the introduction and storage of materials and equipment and the execution of such other work, and properly coordinate the Work with theirs. Contractor shall do all cutting, fitting, and patching of the Work that may be required to properly connect or otherwise make its several parts come together and properly integrate with such other work. Contractor shall not endanger any work of others by cutting, excavating, or otherwise altering such work; provided, however, that Contractor may cut or alter others' work with the written consent of Engineer and the others whose work will be affected. The duties and responsibilities of Contractor under this Paragraph are for the benefit of such utility owners and other contractors to the extent that there are comparable provisions for the benefit of Contractor in said direct contracts between Owner and such utility owners and other contractors.

Copyright © 2007 National Society of Professional Engineers for EJCDC. All rights reserved.

C. If the proper execution or results of any part of Contractor's Work depends upon work performed by others under this Article 7, Contractor shall inspect such other work and promptly report to Engineer in writing any delays, defects, or deficiencies in such other work that render it unavailable or unsuitable for the proper execution and results of Contractor's Work. Contractor's failure to so report will constitute an acceptance of such other work as fit and proper for integration with Contractor's Work except for latent defects and deficiencies in such other work.

7.02 *Coordination*

A. If Owner intends to contract with others for the performance of other work on the Project at the Site, the following will be set forth in Supplementary Conditions:

1. the individual or entity who will have authority and responsibility for coordination of the activities among the various contractors will be identified;

2. the specific matters to be covered by such authority and responsibility will be itemized; and

3. the extent of such authority and responsibilities will be provided.

B. Unless otherwise provided in the Supplementary Conditions, Owner shall have sole authority and responsibility for such coordination.

7.03 *Legal Relationships*

A. Paragraphs 7.01.A and 7.02 are not applicable for utilities not under the control of Owner.

B. Each other direct contract of Owner under Paragraph 7.01.A shall provide that the other contractor is liable to Owner and Contractor for the reasonable direct delay and disruption costs incurred by Contractor as a result of the other contractor's wrongful actions or inactions.

C. Contractor shall be liable to Owner and any other contractor under direct contract to Owner for the reasonable direct delay and disruption costs incurred by such other contractor as a result of Contractor's wrongful action or inactions.

ARTICLE 8 – OWNER'S RESPONSIBILITIES

8.01 *Communications to Contractor*

A. Except as otherwise provided in these General Conditions, Owner shall issue all communications to Contractor through Engineer.

8.02 *Replacement of Engineer*

A. In case of termination of the employment of Engineer, Owner shall appoint an engineer to whom Contractor makes no reasonable objection, whose status under the Contract Documents shall be that of the former Engineer.

Copyright © 2007 National Society of Professional Engineers for EJCDC. All rights reserved.

8.03 *Furnish Data*

A. Owner shall promptly furnish the data required of Owner under the Contract Documents.

8.04 *Pay When Due*

A. Owner shall make payments to Contractor when they are due as provided in Paragraphs 14.02.C and 14.07.C.

8.05 *Lands and Easements; Reports and Tests*

A. Owner's duties with respect to providing lands and easements and providing engineering surveys to establish reference points are set forth in Paragraphs 4.01 and 4.05. Paragraph 4.02 refers to Owner's identifying and making available to Contractor copies of reports of explorations and tests of subsurface conditions and drawings of physical conditions relating to existing surface or subsurface structures at the Site.

8.06 *Insurance*

A. Owner's responsibilities, if any, with respect to purchasing and maintaining liability and property insurance are set forth in Article 5.

8.07 *Change Orders*

A. Owner is obligated to execute Change Orders as indicated in Paragraph 10.03.

8.08 *Inspections, Tests, and Approvals*

A. Owner's responsibility with respect to certain inspections, tests, and approvals is set forth in Paragraph 13.03.B.

8.09 *Limitations on Owner's Responsibilities*

A. The Owner shall not supervise, direct, or have control or authority over, nor be responsible for, Contractor's means, methods, techniques, sequences, or procedures of construction, or the safety precautions and programs incident thereto, or for any failure of Contractor to comply with Laws and Regulations applicable to the performance of the Work. Owner will not be responsible for Contractor's failure to perform the Work in accordance with the Contract Documents.

8.10 *Undisclosed Hazardous Environmental Condition*

A. Owner's responsibility in respect to an undisclosed Hazardous Environmental Condition is set forth in Paragraph 4.06.

Copyright © 2007 National Society of Professional Engineers for EJCDC. All rights reserved.

8.11 *Evidence of Financial Arrangements*

A. Upon request of Contractor, Owner shall furnish Contractor reasonable evidence that financial arrangements have been made to satisfy Owner's obligations under the Contract Documents.

8.12 *Compliance with Safety Program*

A. While at the Site, Owner's employees and representatives shall comply with the specific applicable requirements of Contractor's safety programs of which Owner has been informed pursuant to Paragraph 6.13.D.

ARTICLE 9 – ENGINEER'S STATUS DURING CONSTRUCTION

9.01 *Owner's Representative*

A. Engineer will be Owner's representative during the construction period. The duties and responsibilities and the limitations of authority of Engineer as Owner's representative during construction are set forth in the Contract Documents.

9.02 *Visits to Site*

A. Engineer will make visits to the Site at intervals appropriate to the various stages of construction as Engineer deems necessary in order to observe as an experienced and qualified design professional the progress that has been made and the quality of the various aspects of Contractor's executed Work. Based on information obtained during such visits and observations, Engineer, for the benefit of Owner, will determine, in general, if the Work is proceeding in accordance with the Contract Documents. Engineer will not be required to make exhaustive or continuous inspections on the Site to check the quality or quantity of the Work. Engineer's efforts will be directed toward providing for Owner a greater degree of confidence that the completed Work will conform generally to the Contract Documents. On the basis of such visits and observations, Engineer will keep Owner informed of the progress of the Work and will endeavor to guard Owner against defective Work.

B. Engineer's visits and observations are subject to all the limitations on Engineer's authority and responsibility set forth in Paragraph 9.09. Particularly, but without limitation, during or as a result of Engineer's visits or observations of Contractor's Work, Engineer will not supervise, direct, control, or have authority over or be responsible for Contractor's means, methods, techniques, sequences, or procedures of construction, or the safety precautions and programs incident thereto, or for any failure of Contractor to comply with Laws and Regulations applicable to the performance of the Work.

9.03 *Project Representative*

A. If Owner and Engineer agree, Engineer will furnish a Resident Project Representative to assist Engineer in providing more extensive observation of the Work. The authority and responsibilities of any such Resident Project Representative and assistants will be as provided in the

Copyright © 2007 National Society of Professional Engineers for EJCDC. All rights reserved.

Supplementary Conditions, and limitations on the responsibilities thereof will be as provided in Paragraph 9.09. If Owner designates another representative or agent to represent Owner at the Site who is not Engineer's consultant, agent or employee, the responsibilities and authority and limitations thereon of such other individual or entity will be as provided in the Supplementary Conditions.

9.04 *Authorized Variations in Work*

A. Engineer may authorize minor variations in the Work from the requirements of the Contract Documents which do not involve an adjustment in the Contract Price or the Contract Times and are compatible with the design concept of the completed Project as a functioning whole as indicated by the Contract Documents. These may be accomplished by a Field Order and will be binding on Owner and also on Contractor, who shall perform the Work involved promptly. If Owner or Contractor believes that a Field Order justifies an adjustment in the Contract Price or Contract Times, or both, and the parties are unable to agree on entitlement to or on the amount or extent, if any, of any such adjustment, a Claim may be made therefor as provided in Paragraph 10.05.

9.05 *Rejecting Defective Work*

A. Engineer will have authority to reject Work which Engineer believes to be defective, or that Engineer believes will not produce a completed Project that conforms to the Contract Documents or that will prejudice the integrity of the design concept of the completed Project as a functioning whole as indicated by the Contract Documents. Engineer will also have authority to require special inspection or testing of the Work as provided in Paragraph 13.04, whether or not the Work is fabricated, installed, or completed.

9.06 *Shop Drawings, Change Orders and Payments*

A. In connection with Engineer's authority, and limitations thereof, as to Shop Drawings and Samples, see Paragraph 6.17.

B. In connection with Engineer's authority, and limitations thereof, as to design calculations and design drawings submitted in response to a delegation of professional design services, if any, see Paragraph 6.21.

C. In connection with Engineer's authority as to Change Orders, see Articles 10, 11, and 12.

D. In connection with Engineer's authority as to Applications for Payment, see Article 14.

9.07 *Determinations for Unit Price Work*

A. Engineer will determine the actual quantities and classifications of Unit Price Work performed by Contractor. Engineer will review with Contractor the Engineer's preliminary determinations on such matters before rendering a written decision thereon (by recommendation of an Application for Payment or otherwise). Engineer's written decision thereon will be final and binding (except

Copyright © 2007 National Society of Professional Engineers for EJCDC. All rights reserved.

as modified by Engineer to reflect changed factual conditions or more accurate data) upon Owner and Contractor, subject to the provisions of Paragraph 10.05.

9.08 *Decisions on Requirements of Contract Documents and Acceptability of Work*

A. Engineer will be the initial interpreter of the requirements of the Contract Documents and judge of the acceptability of the Work thereunder. All matters in question and other matters between Owner and Contractor arising prior to the date final payment is due relating to the acceptability of the Work, and the interpretation of the requirements of the Contract Documents pertaining to the performance of the Work, will be referred initially to Engineer in writing within 30 days of the event giving rise to the question.

B. Engineer will, with reasonable promptness, render a written decision on the issue referred. If Owner or Contractor believes that any such decision entitles them to an adjustment in the Contract Price or Contract Times or both, a Claim may be made under Paragraph 10.05. The date of Engineer's decision shall be the date of the event giving rise to the issues referenced for the purposes of Paragraph 10.05.B.

C. Engineer's written decision on the issue referred will be final and binding on Owner and Contractor, subject to the provisions of Paragraph 10.05.

D. When functioning as interpreter and judge under this Paragraph 9.08, Engineer will not show partiality to Owner or Contractor and will not be liable in connection with any interpretation or decision rendered in good faith in such capacity.

9.09 *Limitations on Engineer's Authority and Responsibilities*

A. Neither Engineer's authority or responsibility under this Article 9 or under any other provision of the Contract Documents nor any decision made by Engineer in good faith either to exercise or not exercise such authority or responsibility or the undertaking, exercise, or performance of any authority or responsibility by Engineer shall create, impose, or give rise to any duty in contract, tort, or otherwise owed by Engineer to Contractor, any Subcontractor, any Supplier, any other individual or entity, or to any surety for or employee or agent of any of them.

B. Engineer will not supervise, direct, control, or have authority over or be responsible for Contractor's means, methods, techniques, sequences, or procedures of construction, or the safety precautions and programs incident thereto, or for any failure of Contractor to comply with Laws and Regulations applicable to the performance of the Work. Engineer will not be responsible for Contractor's failure to perform the Work in accordance with the Contract Documents.

C. Engineer will not be responsible for the acts or omissions of Contractor or of any Subcontractor, any Supplier, or of any other individual or entity performing any of the Work.

D. Engineer's review of the final Application for Payment and accompanying documentation and all maintenance and operating instructions, schedules, guarantees, bonds, certificates of inspection, tests and approvals, and other documentation required to be delivered by Paragraph 14.07.A will

Copyright © 2007 National Society of Professional Engineers for EJCDC. All rights reserved.

only be to determine generally that their content complies with the requirements of, and in the case of certificates of inspections, tests, and approvals that the results certified indicate compliance with, the Contract Documents.

E. The limitations upon authority and responsibility set forth in this Paragraph 9.09 shall also apply to the Resident Project Representative, if any, and assistants, if any.

9.10 *Compliance with Safety Program*

A. While at the Site, Engineer's employees and representatives shall comply with the specific applicable requirements of Contractor's safety programs of which Engineer has been informed pursuant to Paragraph 6.13.D.

ARTICLE 10 – CHANGES IN THE WORK; CLAIMS

10.01 *Authorized Changes in the Work*

A. Without invalidating the Contract and without notice to any surety, Owner may, at any time or from time to time, order additions, deletions, or revisions in the Work by a Change Order, or a Work Change Directive. Upon receipt of any such document, Contractor shall promptly proceed with the Work involved which will be performed under the applicable conditions of the Contract Documents (except as otherwise specifically provided).

B. If Owner and Contractor are unable to agree on entitlement to, or on the amount or extent, if any, of an adjustment in the Contract Price or Contract Times, or both, that should be allowed as a result of a Work Change Directive, a Claim may be made therefor as provided in Paragraph 10.05.

10.02 *Unauthorized Changes in the Work*

A. Contractor shall not be entitled to an increase in the Contract Price or an extension of the Contract Times with respect to any work performed that is not required by the Contract Documents as amended, modified, or supplemented as provided in Paragraph 3.04, except in the case of an emergency as provided in Paragraph 6.16 or in the case of uncovering Work as provided in Paragraph 13.04.D.

10.03 *Execution of Change Orders*

A. Owner and Contractor shall execute appropriate Change Orders recommended by Engineer covering:

1. changes in the Work which are: (i) ordered by Owner pursuant to Paragraph 10.01.A, (ii) required because of acceptance of defective Work under Paragraph 13.08.A or Owner's correction of defective Work under Paragraph 13.09, or (iii) agreed to by the parties;

Copyright © 2007 National Society of Professional Engineers for EJCDC. All rights reserved.

2. changes in the Contract Price or Contract Times which are agreed to by the parties, including any undisputed sum or amount of time for Work actually performed in accordance with a Work Change Directive; and

3. changes in the Contract Price or Contract Times which embody the substance of any written decision rendered by Engineer pursuant to Paragraph 10.05; provided that, in lieu of executing any such Change Order, an appeal may be taken from any such decision in accordance with the provisions of the Contract Documents and applicable Laws and Regulations, but during any such appeal, Contractor shall carry on the Work and adhere to the Progress Schedule as provided in Paragraph 6.18.A.

10.04 *Notification to Surety*

A. If the provisions of any bond require notice to be given to a surety of any change affecting the general scope of the Work or the provisions of the Contract Documents (including, but not limited to, Contract Price or Contract Times), the giving of any such notice will be Contractor's responsibility. The amount of each applicable bond will be adjusted to reflect the effect of any such change.

10.05 *Claims*

A. *Engineer's Decision Required*: All Claims, except those waived pursuant to Paragraph 14.09, shall be referred to the Engineer for decision. A decision by Engineer shall be required as a condition precedent to any exercise by Owner or Contractor of any rights or remedies either may otherwise have under the Contract Documents or by Laws and Regulations in respect of such Claims.

B. *Notice:* Written notice stating the general nature of each Claim shall be delivered by the claimant to Engineer and the other party to the Contract promptly (but in no event later than 30 days) after the start of the event giving rise thereto. The responsibility to substantiate a Claim shall rest with the party making the Claim. Notice of the amount or extent of the Claim, with supporting data shall be delivered to the Engineer and the other party to the Contract within 60 days after the start of such event (unless Engineer allows additional time for claimant to submit additional or more accurate data in support of such Claim). A Claim for an adjustment in Contract Price shall be prepared in accordance with the provisions of Paragraph 12.01.B. A Claim for an adjustment in Contract Times shall be prepared in accordance with the provisions of Paragraph 12.02.B. Each Claim shall be accompanied by claimant's written statement that the adjustment claimed is the entire adjustment to which the claimant believes it is entitled as a result of said event. The opposing party shall submit any response to Engineer and the claimant within 30 days after receipt of the claimant's last submittal (unless Engineer allows additional time).

C. *Engineer's Action*: Engineer will review each Claim and, within 30 days after receipt of the last submittal of the claimant or the last submittal of the opposing party, if any, take one of the following actions in writing:

1. deny the Claim in whole or in part;

Copyright © 2007 National Society of Professional Engineers for EJCDC. All rights reserved.

2. approve the Claim; or

3. notify the parties that the Engineer is unable to resolve the Claim if, in the Engineer's sole discretion, it would be inappropriate for the Engineer to do so. For purposes of further resolution of the Claim, such notice shall be deemed a denial.

D. In the event that Engineer does not take action on a Claim within said 30 days, the Claim shall be deemed denied.

E. Engineer's written action under Paragraph 10.05.C or denial pursuant to Paragraphs 10.05.C.3 or 10.05.D will be final and binding upon Owner and Contractor, unless Owner or Contractor invoke the dispute resolution procedure set forth in Article 16 within 30 days of such action or denial.

F. No Claim for an adjustment in Contract Price or Contract Times will be valid if not submitted in accordance with this Paragraph 10.05.

ARTICLE 11 – COST OF THE WORK; ALLOWANCES; UNIT PRICE WORK

11.01 *Cost of the Work*

A. *Costs Included:* The term Cost of the Work means the sum of all costs, except those excluded in Paragraph 11.01.B, necessarily incurred and paid by Contractor in the proper performance of the Work. When the value of any Work covered by a Change Order or when a Claim for an adjustment in Contract Price is determined on the basis of Cost of the Work, the costs to be reimbursed to Contractor will be only those additional or incremental costs required because of the change in the Work or because of the event giving rise to the Claim. Except as otherwise may be agreed to in writing by Owner, such costs shall be in amounts no higher than those prevailing in the locality of the Project, shall not include any of the costs itemized in Paragraph 11.01.B, and shall include only the following items:

1. Payroll costs for employees in the direct employ of Contractor in the performance of the Work under schedules of job classifications agreed upon by Owner and Contractor. Such employees shall include, without limitation, superintendents, foremen, and other personnel employed full time on the Work. Payroll costs for employees not employed full time on the Work shall be apportioned on the basis of their time spent on the Work. Payroll costs shall include, but not be limited to, salaries and wages plus the cost of fringe benefits, which shall include social security contributions, unemployment, excise, and payroll taxes, workers' compensation, health and retirement benefits, bonuses, sick leave, vacation and holiday pay applicable thereto. The expenses of performing Work outside of regular working hours, on Saturday, Sunday, or legal holidays, shall be included in the above to the extent authorized by Owner.

2. Cost of all materials and equipment furnished and incorporated in the Work, including costs of transportation and storage thereof, and Suppliers' field services required in connection therewith. All cash discounts shall accrue to Contractor unless Owner deposits funds with

Copyright © 2007 National Society of Professional Engineers for EJCDC. All rights reserved.

Contractor with which to make payments, in which case the cash discounts shall accrue to Owner. All trade discounts, rebates and refunds and returns from sale of surplus materials and equipment shall accrue to Owner, and Contractor shall make provisions so that they may be obtained.

3. Payments made by Contractor to Subcontractors for Work performed by Subcontractors. If required by Owner, Contractor shall obtain competitive bids from subcontractors acceptable to Owner and Contractor and shall deliver such bids to Owner, who will then determine, with the advice of Engineer, which bids, if any, will be acceptable. If any subcontract provides that the Subcontractor is to be paid on the basis of Cost of the Work plus a fee, the Subcontractor's Cost of the Work and fee shall be determined in the same manner as Contractor's Cost of the Work and fee as provided in this Paragraph 11.01.

4. Costs of special consultants (including but not limited to engineers, architects, testing laboratories, surveyors, attorneys, and accountants) employed for services specifically related to the Work.

5. Supplemental costs including the following:

   a. The proportion of necessary transportation, travel, and subsistence expenses of Contractor's employees incurred in discharge of duties connected with the Work.

   b. Cost, including transportation and maintenance, of all materials, supplies, equipment, machinery, appliances, office, and temporary facilities at the Site, and hand tools not owned by the workers, which are consumed in the performance of the Work, and cost, less market value, of such items used but not consumed which remain the property of Contractor.

   c. Rentals of all construction equipment and machinery, and the parts thereof whether rented from Contractor or others in accordance with rental agreements approved by Owner with the advice of Engineer, and the costs of transportation, loading, unloading, assembly, dismantling, and removal thereof. All such costs shall be in accordance with the terms of said rental agreements. The rental of any such equipment, machinery, or parts shall cease when the use thereof is no longer necessary for the Work.

   d. Sales, consumer, use, and other similar taxes related to the Work, and for which Contractor is liable, as imposed by Laws and Regulations.

   e. Deposits lost for causes other than negligence of Contractor, any Subcontractor, or anyone directly or indirectly employed by any of them or for whose acts any of them may be liable, and royalty payments and fees for permits and licenses.

   f. Losses and damages (and related expenses) caused by damage to the Work, not compensated by insurance or otherwise, sustained by Contractor in connection with the performance of the Work (except losses and damages within the deductible amounts of property insurance established in accordance with Paragraph 5.06.D), provided such

Copyright © 2007 National Society of Professional Engineers for EJCDC. All rights reserved.

losses and damages have resulted from causes other than the negligence of Contractor, any Subcontractor, or anyone directly or indirectly employed by any of them or for whose acts any of them may be liable. Such losses shall include settlements made with the written consent and approval of Owner. No such losses, damages, and expenses shall be included in the Cost of the Work for the purpose of determining Contractor's fee.

g. The cost of utilities, fuel, and sanitary facilities at the Site.

h. Minor expenses such as telegrams, long distance telephone calls, telephone service at the Site, express and courier services, and similar petty cash items in connection with the Work.

i. The costs of premiums for all bonds and insurance Contractor is required by the Contract Documents to purchase and maintain.

B. *Costs Excluded:* The term Cost of the Work shall not include any of the following items:

1. Payroll costs and other compensation of Contractor's officers, executives, principals (of partnerships and sole proprietorships), general managers, safety managers, engineers, architects, estimators, attorneys, auditors, accountants, purchasing and contracting agents, expediters, timekeepers, clerks, and other personnel employed by Contractor, whether at the Site or in Contractor's principal or branch office for general administration of the Work and not specifically included in the agreed upon schedule of job classifications referred to in Paragraph 11.01.A.1 or specifically covered by Paragraph 11.01.A.4, all of which are to be considered administrative costs covered by the Contractor's fee.

2. Expenses of Contractor's principal and branch offices other than Contractor's office at the Site.

3. Any part of Contractor's capital expenses, including interest on Contractor's capital employed for the Work and charges against Contractor for delinquent payments.

4. Costs due to the negligence of Contractor, any Subcontractor, or anyone directly or indirectly employed by any of them or for whose acts any of them may be liable, including but not limited to, the correction of defective Work, disposal of materials or equipment wrongly supplied, and making good any damage to property.

5. Other overhead or general expense costs of any kind and the costs of any item not specifically and expressly included in Paragraphs 11.01.A.

C. *Contractor's Fee:* When all the Work is performed on the basis of cost-plus, Contractor's fee shall be determined as set forth in the Agreement. When the value of any Work covered by a Change Order or when a Claim for an adjustment in Contract Price is determined on the basis of Cost of the Work, Contractor's fee shall be determined as set forth in Paragraph 12.01.C.

Copyright © 2007 National Society of Professional Engineers for EJCDC. All rights reserved.

D. *Documentation:* Whenever the Cost of the Work for any purpose is to be determined pursuant to Paragraphs 11.01.A and 11.01.B, Contractor will establish and maintain records thereof in accordance with generally accepted accounting practices and submit in a form acceptable to Engineer an itemized cost breakdown together with supporting data.

11.02 *Allowances*

A. It is understood that Contractor has included in the Contract Price all allowances so named in the Contract Documents and shall cause the Work so covered to be performed for such sums and by such persons or entities as may be acceptable to Owner and Engineer.

B. *Cash Allowances:*

1. Contractor agrees that:

a. the cash allowances include the cost to Contractor (less any applicable trade discounts) of materials and equipment required by the allowances to be delivered at the Site, and all applicable taxes; and

b. Contractor's costs for unloading and handling on the Site, labor, installation, overhead, profit, and other expenses contemplated for the cash allowances have been included in the Contract Price and not in the allowances, and no demand for additional payment on account of any of the foregoing will be valid.

C. *Contingency Allowance:*

1. Contractor agrees that a contingency allowance, if any, is for the sole use of Owner to cover unanticipated costs.

D. Prior to final payment, an appropriate Change Order will be issued as recommended by Engineer to reflect actual amounts due Contractor on account of Work covered by allowances, and the Contract Price shall be correspondingly adjusted.

11.03 *Unit Price Work*

A. Where the Contract Documents provide that all or part of the Work is to be Unit Price Work, initially the Contract Price will be deemed to include for all Unit Price Work an amount equal to the sum of the unit price for each separately identified item of Unit Price Work times the estimated quantity of each item as indicated in the Agreement.

B. The estimated quantities of items of Unit Price Work are not guaranteed and are solely for the purpose of comparison of Bids and determining an initial Contract Price. Determinations of the actual quantities and classifications of Unit Price Work performed by Contractor will be made by Engineer subject to the provisions of Paragraph 9.07.

C. Each unit price will be deemed to include an amount considered by Contractor to be adequate to cover Contractor's overhead and profit for each separately identified item.

Copyright © 2007 National Society of Professional Engineers for EJCDC. All rights reserved.

D. Owner or Contractor may make a Claim for an adjustment in the Contract Price in accordance with Paragraph 10.05 if:

1. the quantity of any item of Unit Price Work performed by Contractor differs materially and significantly from the estimated quantity of such item indicated in the Agreement; and

2. there is no corresponding adjustment with respect to any other item of Work; and

3. Contractor believes that Contractor is entitled to an increase in Contract Price as a result of having incurred additional expense or Owner believes that Owner is entitled to a decrease in Contract Price and the parties are unable to agree as to the amount of any such increase or decrease.

ARTICLE 12 – CHANGE OF CONTRACT PRICE; CHANGE OF CONTRACT TIMES

12.01 *Change of Contract Price*

A. The Contract Price may only be changed by a Change Order. Any Claim for an adjustment in the Contract Price shall be based on written notice submitted by the party making the Claim to the Engineer and the other party to the Contract in accordance with the provisions of Paragraph 10.05.

B. The value of any Work covered by a Change Order or of any Claim for an adjustment in the Contract Price will be determined as follows:

1. where the Work involved is covered by unit prices contained in the Contract Documents, by application of such unit prices to the quantities of the items involved (subject to the provisions of Paragraph 11.03); or

2. where the Work involved is not covered by unit prices contained in the Contract Documents, by a mutually agreed lump sum (which may include an allowance for overhead and profit not necessarily in accordance with Paragraph 12.01.C.2); or

3. where the Work involved is not covered by unit prices contained in the Contract Documents and agreement to a lump sum is not reached under Paragraph 12.01.B.2, on the basis of the Cost of the Work (determined as provided in Paragraph 11.01) plus a Contractor's fee for overhead and profit (determined as provided in Paragraph 12.01.C).

C. *Contractor's Fee:* The Contractor's fee for overhead and profit shall be determined as follows:

1. a mutually acceptable fixed fee; or

2. if a fixed fee is not agreed upon, then a fee based on the following percentages of the various portions of the Cost of the Work:

a. for costs incurred under Paragraphs 11.01.A.1 and 11.01.A.2, the Contractor's fee shall be 15 percent;

Copyright © 2007 National Society of Professional Engineers for EJCDC. All rights reserved.

b. for costs incurred under Paragraph 11.01.A.3, the Contractor's fee shall be five percent;

c. where one or more tiers of subcontracts are on the basis of Cost of the Work plus a fee and no fixed fee is agreed upon, the intent of Paragraphs 12.01.C.2.a and 12.01.C.2.b is that the Subcontractor who actually performs the Work, at whatever tier, will be paid a fee of 15 percent of the costs incurred by such Subcontractor under Paragraphs 11.01.A.1 and 11.01.A.2 and that any higher tier Subcontractor and Contractor will each be paid a fee of five percent of the amount paid to the next lower tier Subcontractor;

d. no fee shall be payable on the basis of costs itemized under Paragraphs 11.01.A.4, 11.01.A.5, and 11.01.B;

e. the amount of credit to be allowed by Contractor to Owner for any change which results in a net decrease in cost will be the amount of the actual net decrease in cost plus a deduction in Contractor's fee by an amount equal to five percent of such net decrease; and

f. when both additions and credits are involved in any one change, the adjustment in Contractor's fee shall be computed on the basis of the net change in accordance with Paragraphs 12.01.C.2.a through 12.01.C.2.e, inclusive.

12.02 *Change of Contract Times*

A. The Contract Times may only be changed by a Change Order. Any Claim for an adjustment in the Contract Times shall be based on written notice submitted by the party making the Claim to the Engineer and the other party to the Contract in accordance with the provisions of Paragraph 10.05.

B. Any adjustment of the Contract Times covered by a Change Order or any Claim for an adjustment in the Contract Times will be determined in accordance with the provisions of this Article 12.

12.03 *Delays*

A. Where Contractor is prevented from completing any part of the Work within the Contract Times due to delay beyond the control of Contractor, the Contract Times will be extended in an amount equal to the time lost due to such delay if a Claim is made therefor as provided in Paragraph 12.02.A. Delays beyond the control of Contractor shall include, but not be limited to, acts or neglect by Owner, acts or neglect of utility owners or other contractors performing other work as contemplated by Article 7, fires, floods, epidemics, abnormal weather conditions, or acts of God.

B. If Owner, Engineer, or other contractors or utility owners performing other work for Owner as contemplated by Article 7, or anyone for whom Owner is responsible, delays, disrupts, or interferes with the performance or progress of the Work, then Contractor shall be entitled to an equitable adjustment in the Contract Price or the Contract Times, or both. Contractor's

Copyright © 2007 National Society of Professional Engineers for EJCDC. All rights reserved.

entitlement to an adjustment of the Contract Times is conditioned on such adjustment being essential to Contractor's ability to complete the Work within the Contract Times.

C. If Contractor is delayed in the performance or progress of the Work by fire, flood, epidemic, abnormal weather conditions, acts of God, acts or failures to act of utility owners not under the control of Owner, or other causes not the fault of and beyond control of Owner and Contractor, then Contractor shall be entitled to an equitable adjustment in Contract Times, if such adjustment is essential to Contractor's ability to complete the Work within the Contract Times. Such an adjustment shall be Contractor's sole and exclusive remedy for the delays described in this Paragraph 12.03.C.

D. Owner, Engineer, and their officers, directors, members, partners, employees, agents, consultants, or subcontractors shall not be liable to Contractor for any claims, costs, losses, or damages (including but not limited to all fees and charges of engineers, architects, attorneys, and other professionals and all court or arbitration or other dispute resolution costs) sustained by Contractor on or in connection with any other project or anticipated project.

E. Contractor shall not be entitled to an adjustment in Contract Price or Contract Times for delays within the control of Contractor. Delays attributable to and within the control of a Subcontractor or Supplier shall be deemed to be delays within the control of Contractor.

ARTICLE 13 – TESTS AND INSPECTIONS; CORRECTION, REMOVAL OR ACCEPTANCE OF DEFECTIVE WORK

13.01 *Notice of Defects*

A. Prompt notice of all defective Work of which Owner or Engineer has actual knowledge will be given to Contractor. Defective Work may be rejected, corrected, or accepted as provided in this Article 13.

13.02 *Access to Work*

A. Owner, Engineer, their consultants and other representatives and personnel of Owner, independent testing laboratories, and governmental agencies with jurisdictional interests will have access to the Site and the Work at reasonable times for their observation, inspection, and testing. Contractor shall provide them proper and safe conditions for such access and advise them of Contractor's safety procedures and programs so that they may comply therewith as applicable.

13.03 *Tests and Inspections*

A. Contractor shall give Engineer timely notice of readiness of the Work for all required inspections, tests, or approvals and shall cooperate with inspection and testing personnel to facilitate required inspections or tests.

B. Owner shall employ and pay for the services of an independent testing laboratory to perform all inspections, tests, or approvals required by the Contract Documents except:

Copyright © 2007 National Society of Professional Engineers for EJCDC. All rights reserved.

1. for inspections, tests, or approvals covered by Paragraphs 13.03.C and 13.03.D below;

2. that costs incurred in connection with tests or inspections conducted pursuant to Paragraph 13.04.B shall be paid as provided in Paragraph 13.04.C; and

3. as otherwise specifically provided in the Contract Documents.

C. If Laws or Regulations of any public body having jurisdiction require any Work (or part thereof) specifically to be inspected, tested, or approved by an employee or other representative of such public body, Contractor shall assume full responsibility for arranging and obtaining such inspections, tests, or approvals, pay all costs in connection therewith, and furnish Engineer the required certificates of inspection or approval.

D. Contractor shall be responsible for arranging and obtaining and shall pay all costs in connection with any inspections, tests, or approvals required for Owner's and Engineer's acceptance of materials or equipment to be incorporated in the Work; or acceptance of materials, mix designs, or equipment submitted for approval prior to Contractor's purchase thereof for incorporation in the Work. Such inspections, tests, or approvals shall be performed by organizations acceptable to Owner and Engineer.

E. If any Work (or the work of others) that is to be inspected, tested, or approved is covered by Contractor without written concurrence of Engineer, Contractor shall, if requested by Engineer, uncover such Work for observation.

F. Uncovering Work as provided in Paragraph 13.03.E shall be at Contractor's expense unless Contractor has given Engineer timely notice of Contractor's intention to cover the same and Engineer has not acted with reasonable promptness in response to such notice.

13.04 *Uncovering Work*

A. If any Work is covered contrary to the written request of Engineer, it must, if requested by Engineer, be uncovered for Engineer's observation and replaced at Contractor's expense.

B. If Engineer considers it necessary or advisable that covered Work be observed by Engineer or inspected or tested by others, Contractor, at Engineer's request, shall uncover, expose, or otherwise make available for observation, inspection, or testing as Engineer may require, that portion of the Work in question, furnishing all necessary labor, material, and equipment.

C. If it is found that the uncovered Work is defective, Contractor shall pay all claims, costs, losses, and damages (including but not limited to all fees and charges of engineers, architects, attorneys, and other professionals and all court or arbitration or other dispute resolution costs) arising out of or relating to such uncovering, exposure, observation, inspection, and testing, and of satisfactory replacement or reconstruction (including but not limited to all costs of repair or replacement of work of others); and Owner shall be entitled to an appropriate decrease in the Contract Price. If the parties are unable to agree as to the amount thereof, Owner may make a Claim therefor as provided in Paragraph 10.05.

Copyright © 2007 National Society of Professional Engineers for EJCDC. All rights reserved.

D. If the uncovered Work is not found to be defective, Contractor shall be allowed an increase in the Contract Price or an extension of the Contract Times, or both, directly attributable to such uncovering, exposure, observation, inspection, testing, replacement, and reconstruction. If the parties are unable to agree as to the amount or extent thereof, Contractor may make a Claim therefor as provided in Paragraph 10.05.

13.05 *Owner May Stop the Work*

A. If the Work is defective, or Contractor fails to supply sufficient skilled workers or suitable materials or equipment, or fails to perform the Work in such a way that the completed Work will conform to the Contract Documents, Owner may order Contractor to stop the Work, or any portion thereof, until the cause for such order has been eliminated; however, this right of Owner to stop the Work shall not give rise to any duty on the part of Owner to exercise this right for the benefit of Contractor, any Subcontractor, any Supplier, any other individual or entity, or any surety for, or employee or agent of any of them.

13.06 *Correction or Removal of Defective Work*

A. Promptly after receipt of written notice, Contractor shall correct all defective Work, whether or not fabricated, installed, or completed, or, if the Work has been rejected by Engineer, remove it from the Project and replace it with Work that is not defective. Contractor shall pay all claims, costs, losses, and damages (including but not limited to all fees and charges of engineers, architects, attorneys, and other professionals and all court or arbitration or other dispute resolution costs) arising out of or relating to such correction or removal (including but not limited to all costs of repair or replacement of work of others).

B. When correcting defective Work under the terms of this Paragraph 13.06 or Paragraph 13.07, Contractor shall take no action that would void or otherwise impair Owner's special warranty and guarantee, if any, on said Work.

13.07 *Correction Period*

A. If within one year after the date of Substantial Completion (or such longer period of time as may be prescribed by the terms of any applicable special guarantee required by the Contract Documents) or by any specific provision of the Contract Documents, any Work is found to be defective, or if the repair of any damages to the land or areas made available for Contractor's use by Owner or permitted by Laws and Regulations as contemplated in Paragraph 6.11.A is found to be defective, Contractor shall promptly, without cost to Owner and in accordance with Owner's written instructions:

1. repair such defective land or areas; or

2. correct such defective Work; or

3. if the defective Work has been rejected by Owner, remove it from the Project and replace it with Work that is not defective, and

Copyright © 2007 National Society of Professional Engineers for EJCDC. All rights reserved.

4. satisfactorily correct or repair or remove and replace any damage to other Work, to the work of others or other land or areas resulting therefrom.

B. If Contractor does not promptly comply with the terms of Owner's written instructions, or in an emergency where delay would cause serious risk of loss or damage, Owner may have the defective Work corrected or repaired or may have the rejected Work removed and replaced. All claims, costs, losses, and damages (including but not limited to all fees and charges of engineers, architects, attorneys, and other professionals and all court or arbitration or other dispute resolution costs) arising out of or relating to such correction or repair or such removal and replacement (including but not limited to all costs of repair or replacement of work of others) will be paid by Contractor.

C. In special circumstances where a particular item of equipment is placed in continuous service before Substantial Completion of all the Work, the correction period for that item may start to run from an earlier date if so provided in the Specifications.

D. Where defective Work (and damage to other Work resulting therefrom) has been corrected or removed and replaced under this Paragraph 13.07, the correction period hereunder with respect to such Work will be extended for an additional period of one year after such correction or removal and replacement has been satisfactorily completed.

E. Contractor's obligations under this Paragraph 13.07 are in addition to any other obligation or warranty. The provisions of this Paragraph 13.07 shall not be construed as a substitute for, or a waiver of, the provisions of any applicable statute of limitation or repose.

13.08 *Acceptance of Defective Work*

A. If, instead of requiring correction or removal and replacement of defective Work, Owner (and, prior to Engineer's recommendation of final payment, Engineer) prefers to accept it, Owner may do so. Contractor shall pay all claims, costs, losses, and damages (including but not limited to all fees and charges of engineers, architects, attorneys, and other professionals and all court or arbitration or other dispute resolution costs) attributable to Owner's evaluation of and determination to accept such defective Work (such costs to be approved by Engineer as to reasonableness) and for the diminished value of the Work to the extent not otherwise paid by Contractor pursuant to this sentence. If any such acceptance occurs prior to Engineer's recommendation of final payment, a Change Order will be issued incorporating the necessary revisions in the Contract Documents with respect to the Work, and Owner shall be entitled to an appropriate decrease in the Contract Price, reflecting the diminished value of Work so accepted. If the parties are unable to agree as to the amount thereof, Owner may make a Claim therefor as provided in Paragraph 10.05. If the acceptance occurs after such recommendation, an appropriate amount will be paid by Contractor to Owner.

13.09 *Owner May Correct Defective Work*

A. If Contractor fails within a reasonable time after written notice from Engineer to correct defective Work, or to remove and replace rejected Work as required by Engineer in accordance with

Copyright © 2007 National Society of Professional Engineers for EJCDC. All rights reserved.

Paragraph 13.06.A, or if Contractor fails to perform the Work in accordance with the Contract Documents, or if Contractor fails to comply with any other provision of the Contract Documents, Owner may, after seven days written notice to Contractor, correct, or remedy any such deficiency.

B. In exercising the rights and remedies under this Paragraph 13.09, Owner shall proceed expeditiously. In connection with such corrective or remedial action, Owner may exclude Contractor from all or part of the Site, take possession of all or part of the Work and suspend Contractor's services related thereto, take possession of Contractor's tools, appliances, construction equipment and machinery at the Site, and incorporate in the Work all materials and equipment stored at the Site or for which Owner has paid Contractor but which are stored elsewhere. Contractor shall allow Owner, Owner's representatives, agents and employees, Owner's other contractors, and Engineer and Engineer's consultants access to the Site to enable Owner to exercise the rights and remedies under this Paragraph.

C. All claims, costs, losses, and damages (including but not limited to all fees and charges of engineers, architects, attorneys, and other professionals and all court or arbitration or other dispute resolution costs) incurred or sustained by Owner in exercising the rights and remedies under this Paragraph 13.09 will be charged against Contractor, and a Change Order will be issued incorporating the necessary revisions in the Contract Documents with respect to the Work; and Owner shall be entitled to an appropriate decrease in the Contract Price. If the parties are unable to agree as to the amount of the adjustment, Owner may make a Claim therefor as provided in Paragraph 10.05. Such claims, costs, losses and damages will include but not be limited to all costs of repair, or replacement of work of others destroyed or damaged by correction, removal, or replacement of Contractor's defective Work.

D. Contractor shall not be allowed an extension of the Contract Times because of any delay in the performance of the Work attributable to the exercise by Owner of Owner's rights and remedies under this Paragraph 13.09.

ARTICLE 14 – PAYMENTS TO CONTRACTOR AND COMPLETION

14.01 *Schedule of Values*

A. The Schedule of Values established as provided in Paragraph 2.07.A will serve as the basis for progress payments and will be incorporated into a form of Application for Payment acceptable to Engineer. Progress payments on account of Unit Price Work will be based on the number of units completed.

14.02 *Progress Payments*

A. *Applications for Payments:*

1. At least 20 days before the date established in the Agreement for each progress payment (but not more often than once a month), Contractor shall submit to Engineer for review an Application for Payment filled out and signed by Contractor covering the Work completed as of the date of the Application and accompanied by such supporting documentation as is

Copyright © 2007 National Society of Professional Engineers for EJCDC. All rights reserved.

required by the Contract Documents. If payment is requested on the basis of materials and equipment not incorporated in the Work but delivered and suitably stored at the Site or at another location agreed to in writing, the Application for Payment shall also be accompanied by a bill of sale, invoice, or other documentation warranting that Owner has received the materials and equipment free and clear of all Liens and evidence that the materials and equipment are covered by appropriate property insurance or other arrangements to protect Owner's interest therein, all of which must be satisfactory to Owner.

2. Beginning with the second Application for Payment, each Application shall include an affidavit of Contractor stating that all previous progress payments received on account of the Work have been applied on account to discharge Contractor's legitimate obligations associated with prior Applications for Payment.

3. The amount of retainage with respect to progress payments will be as stipulated in the Agreement.

B. *Review of Applications:*

1. Engineer will, within 10 days after receipt of each Application for Payment, either indicate in writing a recommendation of payment and present the Application to Owner or return the Application to Contractor indicating in writing Engineer's reasons for refusing to recommend payment. In the latter case, Contractor may make the necessary corrections and resubmit the Application.

2. Engineer's recommendation of any payment requested in an Application for Payment will constitute a representation by Engineer to Owner, based on Engineer's observations of the executed Work as an experienced and qualified design professional, and on Engineer's review of the Application for Payment and the accompanying data and schedules, that to the best of Engineer's knowledge, information and belief:

   a. the Work has progressed to the point indicated;

   b. the quality of the Work is generally in accordance with the Contract Documents (subject to an evaluation of the Work as a functioning whole prior to or upon Substantial Completion, the results of any subsequent tests called for in the Contract Documents, a final determination of quantities and classifications for Unit Price Work under Paragraph 9.07, and any other qualifications stated in the recommendation); and

   c. the conditions precedent to Contractor's being entitled to such payment appear to have been fulfilled in so far as it is Engineer's responsibility to observe the Work.

3. By recommending any such payment Engineer will not thereby be deemed to have represented that:

   a. inspections made to check the quality or the quantity of the Work as it has been performed have been exhaustive, extended to every aspect of the Work in progress, or

Copyright © 2007 National Society of Professional Engineers for EJCDC. All rights reserved.

involved detailed inspections of the Work beyond the responsibilities specifically assigned to Engineer in the Contract Documents; or

b. there may not be other matters or issues between the parties that might entitle Contractor to be paid additionally by Owner or entitle Owner to withhold payment to Contractor.

4. Neither Engineer's review of Contractor's Work for the purposes of recommending payments nor Engineer's recommendation of any payment, including final payment, will impose responsibility on Engineer:

   a. to supervise, direct, or control the Work, or

   b. for the means, methods, techniques, sequences, or procedures of construction, or the safety precautions and programs incident thereto, or

   c. for Contractor's failure to comply with Laws and Regulations applicable to Contractor's performance of the Work, or

   d. to make any examination to ascertain how or for what purposes Contractor has used the moneys paid on account of the Contract Price, or

   e. to determine that title to any of the Work, materials, or equipment has passed to Owner free and clear of any Liens.

5. Engineer may refuse to recommend the whole or any part of any payment if, in Engineer's opinion, it would be incorrect to make the representations to Owner stated in Paragraph 14.02.B.2. Engineer may also refuse to recommend any such payment or, because of subsequently discovered evidence or the results of subsequent inspections or tests, revise or revoke any such payment recommendation previously made, to such extent as may be necessary in Engineer's opinion to protect Owner from loss because:

   a. the Work is defective, or completed Work has been damaged, requiring correction or replacement;

   b. the Contract Price has been reduced by Change Orders;

   c. Owner has been required to correct defective Work or complete Work in accordance with Paragraph 13.09; or

   d. Engineer has actual knowledge of the occurrence of any of the events enumerated in Paragraph 15.02.A.

C. *Payment Becomes Due:*

1. Ten days after presentation of the Application for Payment to Owner with Engineer's recommendation, the amount recommended will (subject to the provisions of Paragraph 14.02.D) become due, and when due will be paid by Owner to Contractor.

Copyright © 2007 National Society of Professional Engineers for EJCDC. All rights reserved.

D. *Reduction in Payment:*

1. Owner may refuse to make payment of the full amount recommended by Engineer because:

   a. claims have been made against Owner on account of Contractor's performance or furnishing of the Work;

   b. Liens have been filed in connection with the Work, except where Contractor has delivered a specific bond satisfactory to Owner to secure the satisfaction and discharge of such Liens;

   c. there are other items entitling Owner to a set-off against the amount recommended; or

   d. Owner has actual knowledge of the occurrence of any of the events enumerated in Paragraphs 14.02.B.5.a through 14.02.B.5.c or Paragraph 15.02.A.

2. If Owner refuses to make payment of the full amount recommended by Engineer, Owner will give Contractor immediate written notice (with a copy to Engineer) stating the reasons for such action and promptly pay Contractor any amount remaining after deduction of the amount so withheld. Owner shall promptly pay Contractor the amount so withheld, or any adjustment thereto agreed to by Owner and Contractor, when Contractor remedies the reasons for such action.

3. Upon a subsequent determination that Owner's refusal of payment was not justified, the amount wrongfully withheld shall be treated as an amount due as determined by Paragraph 14.02.C.1 and subject to interest as provided in the Agreement.

14.03 *Contractor's Warranty of Title*

A. Contractor warrants and guarantees that title to all Work, materials, and equipment covered by any Application for Payment, whether incorporated in the Project or not, will pass to Owner no later than the time of payment free and clear of all Liens.

14.04 *Substantial Completion*

A. When Contractor considers the entire Work ready for its intended use Contractor shall notify Owner and Engineer in writing that the entire Work is substantially complete (except for items specifically listed by Contractor as incomplete) and request that Engineer issue a certificate of Substantial Completion.

B. Promptly after Contractor's notification, Owner, Contractor, and Engineer shall make an inspection of the Work to determine the status of completion. If Engineer does not consider the Work substantially complete, Engineer will notify Contractor in writing giving the reasons therefor.

C. If Engineer considers the Work substantially complete, Engineer will deliver to Owner a tentative certificate of Substantial Completion which shall fix the date of Substantial Completion. There

Copyright © 2007 National Society of Professional Engineers for EJCDC. All rights reserved.

shall be attached to the certificate a tentative list of items to be completed or corrected before final payment. Owner shall have seven days after receipt of the tentative certificate during which to make written objection to Engineer as to any provisions of the certificate or attached list. If, after considering such objections, Engineer concludes that the Work is not substantially complete, Engineer will, within 14 days after submission of the tentative certificate to Owner, notify Contractor in writing, stating the reasons therefor. If, after consideration of Owner's objections, Engineer considers the Work substantially complete, Engineer will, within said 14 days, execute and deliver to Owner and Contractor a definitive certificate of Substantial Completion (with a revised tentative list of items to be completed or corrected) reflecting such changes from the tentative certificate as Engineer believes justified after consideration of any objections from Owner.

D. At the time of delivery of the tentative certificate of Substantial Completion, Engineer will deliver to Owner and Contractor a written recommendation as to division of responsibilities pending final payment between Owner and Contractor with respect to security, operation, safety, and protection of the Work, maintenance, heat, utilities, insurance, and warranties and guarantees. Unless Owner and Contractor agree otherwise in writing and so inform Engineer in writing prior to Engineer's issuing the definitive certificate of Substantial Completion, Engineer's aforesaid recommendation will be binding on Owner and Contractor until final payment.

E. Owner shall have the right to exclude Contractor from the Site after the date of Substantial Completion subject to allowing Contractor reasonable access to remove its property and complete or correct items on the tentative list.

14.05 *Partial Utilization*

A. Prior to Substantial Completion of all the Work, Owner may use or occupy any substantially completed part of the Work which has specifically been identified in the Contract Documents, or which Owner, Engineer, and Contractor agree constitutes a separately functioning and usable part of the Work that can be used by Owner for its intended purpose without significant interference with Contractor's performance of the remainder of the Work, subject to the following conditions:

1. Owner at any time may request Contractor in writing to permit Owner to use or occupy any such part of the Work which Owner believes to be ready for its intended use and substantially complete. If and when Contractor agrees that such part of the Work is substantially complete, Contractor, Owner, and Engineer will follow the procedures of Paragraph 14.04.A through D for that part of the Work.

2. Contractor at any time may notify Owner and Engineer in writing that Contractor considers any such part of the Work ready for its intended use and substantially complete and request Engineer to issue a certificate of Substantial Completion for that part of the Work.

3. Within a reasonable time after either such request, Owner, Contractor, and Engineer shall make an inspection of that part of the Work to determine its status of completion. If Engineer does not consider that part of the Work to be substantially complete, Engineer will notify Owner and Contractor in writing giving the reasons therefor. If Engineer considers that part

Copyright © 2007 National Society of Professional Engineers for EJCDC. All rights reserved.

of the Work to be substantially complete, the provisions of Paragraph 14.04 will apply with respect to certification of Substantial Completion of that part of the Work and the division of responsibility in respect thereof and access thereto.

4. No use or occupancy or separate operation of part of the Work may occur prior to compliance with the requirements of Paragraph 5.10 regarding property insurance.

14.06 *Final Inspection*

A. Upon written notice from Contractor that the entire Work or an agreed portion thereof is complete, Engineer will promptly make a final inspection with Owner and Contractor and will notify Contractor in writing of all particulars in which this inspection reveals that the Work is incomplete or defective. Contractor shall immediately take such measures as are necessary to complete such Work or remedy such deficiencies.

14.07 *Final Payment*

A. *Application for Payment:*

1. After Contractor has, in the opinion of Engineer, satisfactorily completed all corrections identified during the final inspection and has delivered, in accordance with the Contract Documents, all maintenance and operating instructions, schedules, guarantees, bonds, certificates or other evidence of insurance, certificates of inspection, marked-up record documents (as provided in Paragraph 6.12), and other documents, Contractor may make application for final payment following the procedure for progress payments.

2. The final Application for Payment shall be accompanied (except as previously delivered) by:

   a. all documentation called for in the Contract Documents, including but not limited to the evidence of insurance required by Paragraph 5.04.B.6;

   b. consent of the surety, if any, to final payment;

   c. a list of all Claims against Owner that Contractor believes are unsettled; and

   d. complete and legally effective releases or waivers (satisfactory to Owner) of all Lien rights arising out of or Liens filed in connection with the Work.

3. In lieu of the releases or waivers of Liens specified in Paragraph 14.07.A.2 and as approved by Owner, Contractor may furnish receipts or releases in full and an affidavit of Contractor that: (i) the releases and receipts include all labor, services, material, and equipment for which a Lien could be filed; and (ii) all payrolls, material and equipment bills, and other indebtedness connected with the Work for which Owner might in any way be responsible, or which might in any way result in liens or other burdens on Owner's property, have been paid or otherwise satisfied. If any Subcontractor or Supplier fails to furnish such a release or receipt in full, Contractor may furnish a bond or other collateral satisfactory to Owner to indemnify Owner against any Lien.

Copyright © 2007 National Society of Professional Engineers for EJCDC. All rights reserved.

B. *Engineer's Review of Application and Acceptance:*

1. If, on the basis of Engineer's observation of the Work during construction and final inspection, and Engineer's review of the final Application for Payment and accompanying documentation as required by the Contract Documents, Engineer is satisfied that the Work has been completed and Contractor's other obligations under the Contract Documents have been fulfilled, Engineer will, within ten days after receipt of the final Application for Payment, indicate in writing Engineer's recommendation of payment and present the Application for Payment to Owner for payment. At the same time Engineer will also give written notice to Owner and Contractor that the Work is acceptable subject to the provisions of Paragraph 14.09. Otherwise, Engineer will return the Application for Payment to Contractor, indicating in writing the reasons for refusing to recommend final payment, in which case Contractor shall make the necessary corrections and resubmit the Application for Payment.

C. *Payment Becomes Due:*

1. Thirty days after the presentation to Owner of the Application for Payment and accompanying documentation, the amount recommended by Engineer, less any sum Owner is entitled to set off against Engineer's recommendation, including but not limited to liquidated damages, will become due and will be paid by Owner to Contractor.

14.08 *Final Completion Delayed*

A. If, through no fault of Contractor, final completion of the Work is significantly delayed, and if Engineer so confirms, Owner shall, upon receipt of Contractor's final Application for Payment (for Work fully completed and accepted) and recommendation of Engineer, and without terminating the Contract, make payment of the balance due for that portion of the Work fully completed and accepted. If the remaining balance to be held by Owner for Work not fully completed or corrected is less than the retainage stipulated in the Agreement, and if bonds have been furnished as required in Paragraph 5.01, the written consent of the surety to the payment of the balance due for that portion of the Work fully completed and accepted shall be submitted by Contractor to Engineer with the Application for such payment. Such payment shall be made under the terms and conditions governing final payment, except that it shall not constitute a waiver of Claims.

14.09 *Waiver of Claims*

A. The making and acceptance of final payment will constitute:

1. a waiver of all Claims by Owner against Contractor, except Claims arising from unsettled Liens, from defective Work appearing after final inspection pursuant to Paragraph 14.06, from failure to comply with the Contract Documents or the terms of any special guarantees specified therein, or from Contractor's continuing obligations under the Contract Documents; and

Copyright © 2007 National Society of Professional Engineers for EJCDC. All rights reserved.

2. a waiver of all Claims by Contractor against Owner other than those previously made in accordance with the requirements herein and expressly acknowledged by Owner in writing as still unsettled.

ARTICLE 15 – SUSPENSION OF WORK AND TERMINATION

15.01 *Owner May Suspend Work*

A. At any time and without cause, Owner may suspend the Work or any portion thereof for a period of not more than 90 consecutive days by notice in writing to Contractor and Engineer which will fix the date on which Work will be resumed. Contractor shall resume the Work on the date so fixed. Contractor shall be granted an adjustment in the Contract Price or an extension of the Contract Times, or both, directly attributable to any such suspension if Contractor makes a Claim therefor as provided in Paragraph 10.05.

15.02 *Owner May Terminate for Cause*

A. The occurrence of any one or more of the following events will justify termination for cause:

1. Contractor's persistent failure to perform the Work in accordance with the Contract Documents (including, but not limited to, failure to supply sufficient skilled workers or suitable materials or equipment or failure to adhere to the Progress Schedule established under Paragraph 2.07 as adjusted from time to time pursuant to Paragraph 6.04);

2. Contractor's disregard of Laws or Regulations of any public body having jurisdiction;

3. Contractor's repeated disregard of the authority of Engineer; or

4. Contractor's violation in any substantial way of any provisions of the Contract Documents.

B. If one or more of the events identified in Paragraph 15.02.A occur, Owner may, after giving Contractor (and surety) seven days written notice of its intent to terminate the services of Contractor:

1. exclude Contractor from the Site, and take possession of the Work and of all Contractor's tools, appliances, construction equipment, and machinery at the Site, and use the same to the full extent they could be used by Contractor (without liability to Contractor for trespass or conversion);

2. incorporate in the Work all materials and equipment stored at the Site or for which Owner has paid Contractor but which are stored elsewhere; and

3. complete the Work as Owner may deem expedient.

C. If Owner proceeds as provided in Paragraph 15.02.B, Contractor shall not be entitled to receive any further payment until the Work is completed. If the unpaid balance of the Contract Price exceeds all claims, costs, losses, and damages (including but not limited to all fees and charges of

Copyright © 2007 National Society of Professional Engineers for EJCDC. All rights reserved.

engineers, architects, attorneys, and other professionals and all court or arbitration or other dispute resolution costs) sustained by Owner arising out of or relating to completing the Work, such excess will be paid to Contractor. If such claims, costs, losses, and damages exceed such unpaid balance, Contractor shall pay the difference to Owner. Such claims, costs, losses, and damages incurred by Owner will be reviewed by Engineer as to their reasonableness and, when so approved by Engineer, incorporated in a Change Order. When exercising any rights or remedies under this Paragraph, Owner shall not be required to obtain the lowest price for the Work performed.

D. Notwithstanding Paragraphs 15.02.B and 15.02.C, Contractor's services will not be terminated if Contractor begins within seven days of receipt of notice of intent to terminate to correct its failure to perform and proceeds diligently to cure such failure within no more than 30 days of receipt of said notice.

E. Where Contractor's services have been so terminated by Owner, the termination will not affect any rights or remedies of Owner against Contractor then existing or which may thereafter accrue. Any retention or payment of moneys due Contractor by Owner will not release Contractor from liability.

F. If and to the extent that Contractor has provided a performance bond under the provisions of Paragraph 5.01.A, the termination procedures of that bond shall supersede the provisions of Paragraphs 15.02.B and 15.02.C.

15.03 *Owner May Terminate For Convenience*

A. Upon seven days written notice to Contractor and Engineer, Owner may, without cause and without prejudice to any other right or remedy of Owner, terminate the Contract. In such case, Contractor shall be paid for (without duplication of any items):

1. completed and acceptable Work executed in accordance with the Contract Documents prior to the effective date of termination, including fair and reasonable sums for overhead and profit on such Work;

2. expenses sustained prior to the effective date of termination in performing services and furnishing labor, materials, or equipment as required by the Contract Documents in connection with uncompleted Work, plus fair and reasonable sums for overhead and profit on such expenses;

3. all claims, costs, losses, and damages (including but not limited to all fees and charges of engineers, architects, attorneys, and other professionals and all court or arbitration or other dispute resolution costs) incurred in settlement of terminated contracts with Subcontractors, Suppliers, and others; and

4. reasonable expenses directly attributable to termination.

Copyright © 2007 National Society of Professional Engineers for EJCDC. All rights reserved.

B. Contractor shall not be paid on account of loss of anticipated profits or revenue or other economic loss arising out of or resulting from such termination.

15.04 *Contractor May Stop Work or Terminate*

A. If, through no act or fault of Contractor, (i) the Work is suspended for more than 90 consecutive days by Owner or under an order of court or other public authority, or (ii) Engineer fails to act on any Application for Payment within 30 days after it is submitted, or (iii) Owner fails for 30 days to pay Contractor any sum finally determined to be due, then Contractor may, upon seven days written notice to Owner and Engineer, and provided Owner or Engineer do not remedy such suspension or failure within that time, terminate the Contract and recover from Owner payment on the same terms as provided in Paragraph 15.03.

B. In lieu of terminating the Contract and without prejudice to any other right or remedy, if Engineer has failed to act on an Application for Payment within 30 days after it is submitted, or Owner has failed for 30 days to pay Contractor any sum finally determined to be due, Contractor may, seven days after written notice to Owner and Engineer, stop the Work until payment is made of all such amounts due Contractor, including interest thereon. The provisions of this Paragraph 15.04 are not intended to preclude Contractor from making a Claim under Paragraph 10.05 for an adjustment in Contract Price or Contract Times or otherwise for expenses or damage directly attributable to Contractor's stopping the Work as permitted by this Paragraph.

ARTICLE 16 – DISPUTE RESOLUTION

16.01 *Methods and Procedures*

A. Either Owner or Contractor may request mediation of any Claim submitted to Engineer for a decision under Paragraph 10.05 before such decision becomes final and binding. The mediation will be governed by the Construction Industry Mediation Rules of the American Arbitration Association in effect as of the Effective Date of the Agreement. The request for mediation shall be submitted in writing to the American Arbitration Association and the other party to the Contract. Timely submission of the request shall stay the effect of Paragraph 10.05.E.

B. Owner and Contractor shall participate in the mediation process in good faith. The process shall be concluded within 60 days of filing of the request. The date of termination of the mediation shall be determined by application of the mediation rules referenced above.

C. If the Claim is not resolved by mediation, Engineer's action under Paragraph 10.05.C or a denial pursuant to Paragraphs 10.05.C.3 or 10.05.D shall become final and binding 30 days after termination of the mediation unless, within that time period, Owner or Contractor:

1. elects in writing to invoke any dispute resolution process provided for in the Supplementary Conditions; or

2. agrees with the other party to submit the Claim to another dispute resolution process; or

Copyright © 2007 National Society of Professional Engineers for EJCDC. All rights reserved.

3. gives written notice to the other party of the intent to submit the Claim to a court of competent jurisdiction.

ARTICLE 17 – MISCELLANEOUS

17.01 *Giving Notice*

A. Whenever any provision of the Contract Documents requires the giving of written notice, it will be deemed to have been validly given if:

1. delivered in person to the individual or to a member of the firm or to an officer of the corporation for whom it is intended; or

2. delivered at or sent by registered or certified mail, postage prepaid, to the last business address known to the giver of the notice.

17.02 *Computation of Times*

A. When any period of time is referred to in the Contract Documents by days, it will be computed to exclude the first and include the last day of such period. If the last day of any such period falls on a Saturday or Sunday or on a day made a legal holiday by the law of the applicable jurisdiction, such day will be omitted from the computation.

17.03 *Cumulative Remedies*

A. The duties and obligations imposed by these General Conditions and the rights and remedies available hereunder to the parties hereto are in addition to, and are not to be construed in any way as a limitation of, any rights and remedies available to any or all of them which are otherwise imposed or available by Laws or Regulations, by special warranty or guarantee, or by other provisions of the Contract Documents. The provisions of this Paragraph will be as effective as if repeated specifically in the Contract Documents in connection with each particular duty, obligation, right, and remedy to which they apply.

17.04 *Survival of Obligations*

A. All representations, indemnifications, warranties, and guarantees made in, required by, or given in accordance with the Contract Documents, as well as all continuing obligations indicated in the Contract Documents, will survive final payment, completion, and acceptance of the Work or termination or completion of the Contract or termination of the services of Contractor.

17.05 *Controlling Law*

A. This Contract is to be governed by the law of the state in which the Project is located.

Copyright © 2007 National Society of Professional Engineers for EJCDC. All rights reserved.

17.06 *Headings*

A. Article and paragraph headings are inserted for convenience only and do not constitute parts of these General Conditions.

Copyright © 2007 National Society of Professional Engineers for EJCDC. All rights reserved.

500-A SUPPLEMENTARY CONDITIONS

These Supplementary Conditions amend or supplement Section 700 – Standard General Conditions of the Construction Contract prepared by the Engineers Joint Contract Documents Council (EJCDC C-700, 2007 edition) and other provisions of the Contract Documents as indicated below. All provisions which are not amended or supplemented in these Supplementary Conditions remain in full force and effect.

The terms used in these Supplementary Conditions have the meanings stated in the General Conditions. Additional terms used in these Supplementary Conditions have the meanings stated below, which are applicable to both the singular and plural thereof.

SC-1.01 Make the following modifications to 1.01 *Defined Terms*

A. Delete Paragraph 1.01 A. 5 entirely and insert the following in its place:

"5. Bid - The offer or proposal of a Bidder submitted on the prescribed form setting forth the prices and schedule for the Work to be performed."

B. Add a new paragraph 1.01 A. 52:

"52. Written Amendment – A written statement modifying the Contract Documents, signed by OWNER and CONTRACTOR on or after the Effective Date of the Agreement and normally dealing with the non-engineering or nontechnical rather than strictly construction-related aspects of the Contract Documents."

SC-1.02 Make the following modifications to 1.02 *Terminology*

A. Add a new paragraph "B.2" as follows:

2. "At no additional cost to Owner", "With no extra compensation to Contractor", "At Contractor's own expense", or similar words mean that the Contractor will perform or provide specified Work and that all cost for performing the Work is included in the Contract Price."

B. Delete Paragraph C. Add the following:

"C. Day

1. A "calendar day" shall be a day of twenty-four hours measured from midnight to the next midnight, and is any day of the year, with no days being excluded. If not otherwise specified in contract documents "day" shall mean calendar day.

2. A "working day" shall be a day which permits construction of the principal units of the work for a period of not less than seven hours between 7:00 a.m. and 6:00 p.m. Working days do not include days on which weather or other conditions not under the control of the Contractor prevent Contractor from working the seven hours defining a working day. Working days do not include Sundays or any of the following holidays: New Year, President's Day, Good Friday, Memorial Day, Independence

Day, Labor Day, Thanksgiving Day, the day after Thanksgiving and Christmas Eve and Christmas Day."

C. Add new paragraphs "E.5 and E.6" as follows:

"5. Specifications are written in modified brief style. Requirements apply to all Work of the same kind, class, and type even though the word "all" is not stated.

6. Simple imperative sentence structure is used which places a verb as the first word in the sentence. It is understood that the words "furnish", "install", "provide", or similar words include the meaning of the phrase "The Contractor shall..." before these words."

SC-2.02 Make the following modifications to 2.02 *Copies of Documents*

A. Amend the first sentence of paragraph GC-2.02 A. by deleting "ten" and inserting "two."

SC-2.05 Make the following modifications to 2.05 *Before Starting Construction*

A. Add the following new paragraphs immediately after paragraph 2.05

"B. Before undertaking each part of the Work, Contractor shall carefully study and compare the Contract Documents and check and verify pertinent figures shown thereon and all applicable field measurements. Within 3 calendar days, Contractor shall report in writing to the Owner any conflict, error, ambiguity or discrepancy which the Contractor may discover and shall obtain a written interpretation from the Engineer before proceeding with any work affected thereby. In the event of a conflict in the Drawings, Specifications, or other portions of the Contract Document which were not reported prior to the Award of the Contract, the Contractor shall be deemed to have included the most expensive item in their bid.

SC-3.01 Make the following modifications to 3.01 *Intent*

A. Add the following to 3.01.A

"Drawings and specifications do not indicate or describe all of the work required to complete the project. Additional details required for the correct installation of selected products are to be provided by the Contractor. Provide any work, materials or equipment required for a complete and functional system even if they are not detailed or specified."

1. The contract requirements described in the General Conditions, Supplementary Conditions and General Requirements apply to each and all specification sections unless specifically noted otherwise.

2. Organization of Contract Documents is not intended to control or to lessen the responsibility of the Contractor when dividing work among Subcontractors, or

to establish the extent of work to be performed by any trade, Subcontractor or Supplier. Specifications or details do not need to be indicated or specified in each specification or drawing. Items shown in the contract documents are applicable regardless of location in the Contract Documents.

3. Standard paragraph titles and other identifications of subject matter in the specifications are intended to aid in locating and recognizing various requirements of the specifications. Titles do not define, limit, or otherwise restrict specification text."

B. Add new paragraphs "D - F" as follows:

"D. Contractor must comply with the most stringent requirements where compliance with two or more standards is specified, and contract documents establish different or conflicting requirements for minimum quantities or quality levels, unless Contract Documents indicate otherwise.

1. Quantity or quality level shown or indicated shall be the minimum to be provided or performed in every instance.
2. Actual installation must meet or exceed the minimum quality indicated.
3. In complying with these requirements, indicated numeric values are minimum or maximum values, as noted, or appropriate for context of requirements.
4. Refer instances of uncertainty to the Engineer for a decision before proceeding.

E. Provide materials and equipment comparable in quality to similar materials and equipment incorporated in the project or as required to meet the minimum requirements of the application if the materials and equipment are shown in the drawings but are not included in the specifications.

F. The Contract Documents comprise the entire Agreement between Owner and Contractor. The Contract Documents may be modified only Change Order, or Written Amendment."

SC-3.02 Make the following modifications to 3.02 *Reference Standards*

A. Add a new paragraph "B" as follows:

"B. Contractor must comply with applicable construction industry standards as if such standards are included into the Contract Documents regardless of lack of reference in the Contract Documents. Apply provisions of the Contract Documents where Contract Documents include more stringent requirements than these referenced standards.

1. Standards referenced directly in the Contract Documents take precedence over standards that are not referenced but recognized in the construction industry as applicable.
2. Comply with standards not referenced but recognized in the construction industry as applicable for performance of the work except as otherwise

limited by the Contract Documents. The Engineer determines whether code or standard is applicable, or which of several are applicable.

3. Make copies of reference standards available as requested by Owner."

SC-3.03 Make the following modifications to 3.03 *Reporting and Resolving Discrepancies*

A. Delete Paragraph 3.03.A.3 entirely and insert the following in its place:

3. "In the event of a conflict in the Drawings, Specifications, or other portions of the Contract Documents which were not reported prior to the Bidding of the Contract, the Contractor shall be deemed to have included the most expensive item, system, procedure, etc. in its Bid."

SC-3.05 Make the following modifications to 3.05 *Reuse of Documents*

A. Delete the last sentence of 3.05 B entirely and insert the following in its place:

"Nothing herein shall preclude Contractor from retaining copies of the Contract Documents for record purposes, unless specifically prohibited in writing by the Owner for security reasons. If the Owner so directs, Contractor shall surrender all copies of the construction contract documents and other related documents, in paper or digital format and remove these documents from computer equipment or storage devices as a condition of final payment."

SC-3.06 Make the following modifications to 3.06 *Electronic Data*

A. Delete Paragraph 3.06.B entirely.

SC-4.01 Make the following modifications to 4.01 *Availability of Lands*

A. Add the following to Paragraphs 4.01.C:

"A copy of the written agreements for the use of such land shall be provided to the Owner for record purposes."

SC-4.03 Make the following modifications to 4.03 *Differing Subsurface or Physical Conditions*

A. Amend paragraph 4.03 A. by deleting "promptly" and inserting "promptly but no later than within three (3) calendar days."

B. Add the following new Paragraph immediately after Paragraph 4.03.B:

"If Engineer concludes that a change in the Contract Documents is required, a Work Change Directive or a Change Order may be issued to reflect and document such consequences. An equitable adjustment may be made in the Contract Price or Contract Times, or both, to the extent that they are attributable to the existence

or location of any Underground Facility that was not shown or indicated or not shown or indicated with reasonable accuracy in the Contract Documents and that Contractor did not know of and could not reasonably have been expected to be aware of or to have anticipated. If Owner and Contractor are unable to agree on entitlement to or on the amount or extent, if any, of any such adjustment in Contract Price or Contract Times, Owner or Contractor may make a Claim therefore as provided in Paragraph 10.05."

SC-4.04 Make the following modifications to 4.04 *Underground Facilities*

A. Amend paragraph 4.04.B.1. by deleting "promptly" and inserting "promptly but no later than within three (3) calendar days."

SC-4.06 Make the following modifications to 4.06 *Hazardous Environmental Conditions at Site*

A. Delete Paragraphs 4.06.A and 4.06.B in their entirety and insert the following:

"A. No reports or drawings related to Hazardous Environmental Conditions at the Site are known to Owner."

B. Delete Paragraphs 4.06.G. entirely.

D. Delete Paragraphs 4.06.H. entirely and insert the following in its place:

"H. **TO THE FULLEST EXTENT PERMITTED BY LAWS AND REGULATIONS, CONTRACTOR SHALL INDEMNIFY AND HOLD HARMLESS OWNER AND ENGINEER, AND THE OFFICERS, DIRECTORS, MEMBERS, PARTNERS, EMPLOYEES, AGENTS, CONSULTANTS, AND SUBCONTRACTORS OF EACH AND ANY OF THEM FROM AND AGAINST ALL CLAIMS, COSTS, LOSSES, AND DAMAGES (INCLUDING BUT NOT LIMITED TO ALL FEES AND CHARGES OF ENGINEERS, ARCHITECTS, ATTORNEYS, AND OTHER PROFESSIONALS AND ALL COURT OR ARBITRATION OR OTHER DISPUTE RESOLUTION COSTS) ARISING OUT OF OR RELATING TO A HAZARDOUS ENVIRONMENTAL CONDITION CREATED BY CONTRACTOR OR BY ANYONE FOR WHOM CONTRACTOR IS RESPONSIBLE. NOTHING IN THIS PARAGRAPH 4.06.H SHALL OBLIGATE CONTRACTOR TO INDEMNIFY ANY INDIVIDUAL OR ENTITY FROM AND AGAINST THE CONSEQUENCES OF THAT INDIVIDUAL'S OR ENTITY'S OWN NEGLIGENCE.**"

SC-5.01 Make the following modifications to 5.01 *Performance, Payment and Other Bonds*

A. Add the following to Paragraph 5.01.C."

"Failure of the Contractor to provide a satisfactory replacement bond may be considered an event of default under Article 15, Paragraph 15.02."

B. Add new paragraphs immediately after paragraph 5.01C

"D. Amounts owed by Owner to Contractor under the Contract shall be used for the performance of the Contract and to satisfy claims, if any, under any performance bond or payment bond. By Contractor furnishing and Owner accepting these bonds, they agree that all funds earned by Contractor in the performance of the Contract are dedicated to satisfy obligations of Contractor under these bonds, subject to Owner's priority to use the funds for the completion of the Work.

E. Contractor or surety on behalf of Contractor shall notify the Owner within 3 calendar days of all claims filed against the Payment Bond. When a claimant has satisfied the conditions prescribed by Texas Government Code 2253, the Contractor or surety on behalf of Contractor shall, with reasonable promptness, notify the claimant and Owner of the amounts that are undisputed and the basis for challenging any amounts that are disputed, including, but not limited to, the lack of substantiating documentation to support the claim as to entitlement or amount, and the Contractor or surety on behalf of Contractor shall, with reasonable promptness, pay or make arrangements for payment of any undisputed amount; provided, however, that the failure of the Contractor or surety on behalf of Contractor to timely discharge its obligations under this paragraph or to dispute or identify any specific defense to all or any part of a claim shall not be deemed to be an admission of liability by the Contractor or surety as to such claim or otherwise constitute a waiver of the Contractor's or surety's defenses to, or right to dispute, such claim."

F. Owner shall not be liable for payment of any costs or expenses of any claimant under Payment Bonds, and shall have no obligations to make payments to, give notices on behalf of, or otherwise have obligations to claimants under Payment Bonds."

SC-5.02 Make the following modifications to 5.02 *Licensed Sureties and Insurers*

A. Add a new paragraph "B." as follows:

"B. Insurance companies providing insurance required by Contract Documents shall have a minimum rating of A-VIII according to A.M. Best Company."

SC-5.03 Make the following modifications to 5.03 *Certificates of Insurance*

A. Delete Paragraph 5.03.B entirely.

SC-5.04 The following additional information is provided as required by Paragraph 5.04 *Contractor's Liability Insurance*

A. Worker's Compensation and Employer's Liability Insurance required by Paragraph 5.04. is to provide coverage for not less than the following amounts or greater where required by Laws and Regulations.

Workers' Compensation, etc.,	
1) State:	Statutory

2) Applicable Federal (e.g., Longshore)	Statutory
Employers' Liability	
1) Bodily Injury by Accident	$500,000
2) Bodily Injury by Disease - Each Employee	$500,000
3) Bodily Injury by Disease - Policy Limit	$500,000
Insurance shall include a waiver of subrogation in favor of the Owner and Additional Insured identified in Paragraph SC-5.04 E.	

B. Contractor's Liability Insurance required by Paragraph 5.04 is to provide coverage for not less than the following amounts or greater where required by Laws and Regulations:

Insurance for Claims of Damages	
1) Comprehensive General Liability (Except Products - Completed Operations)	$2,000,000 / Occurrence $2,000,000 / Aggregate
2) Products - Completed Operations	$1,000,000 / Occurrence $2,000,000 / Aggregate
3) Personal and Advertising Injury (One Person/Organization)	$1,000,000
4) Each Occurrence (Bodily Injury and Property Damage)	$1,000,000
5) Limit Per Person - Medical Expense	$10,000
6) Personal Injury Liability coverage will include claims arising out of Employment Practices Liability, limited to coverage provided under standard contract.	$1,000,000
7) Property Damage Liability insurance will provide explosion, collapse and underground coverage where applicable	$1,000,000

C. Contractor's Automobile Liability Insurance required by Paragraph 5.04.A.6 is to provide coverage for not less than the following amounts or greater where required by Laws and Regulations.

Bodily Injury:	
1) Each Person	$1,000,000
2) Each Accident	$1,000,000
Property Damage:	

1) Each Accident, or	$1,000,000
2) Combined Single Limit (Bodily Injury and Property Damage)	$1,000,000

D. Additional insured on all insurance policies, except for Worker's Compension, in accordance with Paragraph 5.04 B include:

Comal County, Texas, including its elected officials, officers, and employees

E. Contractor's Contractual Liability Insurance required by Paragraph 5.04.B is to provide coverage for not less than the following amounts or greater where required by Laws and Regulations.

Contractor's Contractual Liability Insurance	
1) General Aggregate	$1,000,000
2) Each Occurrence (Bodily Injury and Property Damage)	$1,000,000

SC-5.06 Make the following modifications to 5.06 *Property Insurance*

A. Delete Paragraph 5.06.A entirely.

B. Amend paragraph 5.06.A.4 by inserting the following language after the word "Work" in the second line:

"and in transit for incorporation in the Work from such storage locations"

C. Delete Paragraph 5.06.B entirely and insert the following in its place:

"B. Contractor shall purchase and maintain insurance or additional property insurance as may be required by the Supplementary Conditions or Laws and Regulations which will include the interests of those listed as an insured or listed as an additional insured in Paragraph SC 5.04 E."

D. Delete Paragraph 5.06.D entirely.

E. Delete Paragraph 5.06.E entirely.

SC-5.07 Make the following modifications to 5.07 *Waiver of Rights*

A. Delete Paragraph 5.07.B entirely.

SC-5.11 Make the following modifications to ARTICLE 5 – BONDS AND INSURANCE

A. Add a new paragraph "5.11" as follows:

"5.11 *Owner's Insurance for Project*

A. Owner shall not be responsible for purchasing and maintaining any insurance to protect the interest of the Contractor, Subcontractors, or others in the Work. The stated limits of insurance required are minimum only. Contractor shall determine the limits that are adequate. These limits may be basic policy limits or any combination

of basic limits and umbrella limits. In any event, Contractor is fully responsible for all losses arising out of, resulting from or connected with operations under this contract whether or not said losses are covered by insurance. The acceptance of certificates or other evidence of insurance by the Owner, Engineer, and/or others listed as additional insured in Paragraph SC-5.04 E that in any respect do not comply with the Contract requirements does not release the Contractor from compliance herewith."

SC-6.05 Make the following modifications to 6.05 *Substitutes and "Or-equals"*

A. Delete paragraph 6.05 A. and insert the following in its place:

"A. Where equipment and products are specified by name, no substitutes or "or-equal" will be considered or approved unless the term "or-equal" is included in the individual Specification. If substitutes or "or equals" are specifically permitted for consideration by the individual Specifications, they must be submitted and will be reviewed and evaluated in accordance with the provisions established in Paragraph 6.05 and in the General Requirements of the Specifications."

Subparagraphs 605.A.1 and 605.A.2 remain intact.

B. Amend paragraph 6.05 C. by deleting the third sentence.

C. Amend paragraph 6.05 C. by deleting the fourth sentence and inserting the following in its place:

"No "or-equal" or substitute will be ordered, installed or utilized without written authorization from OWNER."

D. Amend paragraph 6.05 E. by deleting the word "substitute" in all locations and replacing it with the phrase "substitute or "or-equal"".

SC-6.06 Make the following modifications to 6.06 *Concerning Subcontractors, Suppliers and Others*

A. Amend paragraph 6.06 B. by deleting the words "Supplementary Conditions" and inserting the words "Contract Documents" it their place.

SC-6.07 Make the following modifications to 6.07 *Patent Fees and Royalties*

A. Delete Paragraphs 6.07.B. entirely.

B. Delete Paragraphs 6.07.C. entirely and insert the following in its place:

"C. TO THE FULLEST EXTENT PERMITTED BY LAWS AND REGULATIONS, CONTRACTOR SHALL INDEMNIFY AND HOLD HARMLESS OWNER, AND THE OFFICERS, DIRECTORS, MEMBERS, PARTNERS, EMPLOYEES, AGENTS, CONSULTANTS AND SUBCONTRACTORS OF EACH AND ANY OF THEM FROM AND AGAINST ALL CLAIMS, COSTS, LOSSES, AND DAMAGES

(INCLUDING BUT NOT LIMITED TO ALL FEES AND CHARGES OF ENGINEERS, ARCHITECTS, ATTORNEYS, AND OTHER PROFESSIONALS AND ALL COURT OR ARBITRATION OR OTHER DISPUTE RESOLUTION COSTS) ARISING OUT OF OR RELATING TO ANY INFRINGEMENT OF PATENT RIGHTS OR COPYRIGHTS INCIDENT TO THE USE IN THE PERFORMANCE OF THE WORK OR RESULTING FROM THE INCORPORATION IN THE WORK OF ANY INVENTION, DESIGN, PROCESS, PRODUCT, OR DEVICE NOT SPECIFIED IN THE CONTRACT DOCUMENTS."

SC-6.08 Make the following modifications to 6.08 *Permits*:

A. Amend paragraph 6.08 A by deleting the fourth sentence and inserting the following in its place:

"Contractor shall pay all charges of utility owners for connections to the Work, and Owner shall pay all charges of such utility owners for capital costs related thereto, such as plant investment fees."

SC-6.09 Make the following modifications to 6.09 *Laws and Regulations*

A. Delete paragraph 6.09 B. and insert the following in its place:

"B. If Contractor performs any Work that it is contrary to Laws or Regulations, Contractor shall bear all claims, costs, losses, and damages (including but not limited to all fees and charges of engineers, architects, attorneys, and other professionals and all court or arbitration or other dispute resolution costs) arising out of or relating to such Work."

B. Add a new paragraph "D" as follows:

"D. All Bidders are required to complete and submit with their Bid the Vendor Compliance to House Bill 620, included in the Bid Documents."

C. Add a new paragraph "E" as follows. Definitions included in this paragraph pertain only to this paragraph which is included verbatim as a statutory requirement of the State of Texas. The paragraph is to read as follows:

"E. Workers Compensation Statement for Building or Construction Projects for Government entities in Texas

A. Definitions:

Certificate of coverage ("certificate") - A copy of a certificate of insurance, a certificate of authority to self-insure issued by the commission, or a coverage agreement (TWCC-81, TWCC-82, TWCC-83, or TWCC-84), showing statutory workers' compensation insurance coverage for the person's or entity's employees providing services on a project for the duration of the project.

Duration of the project - includes the time from the beginning of the work on the project until the Contractor's/person's work on the project has been completed and accepted by the governmental entity.

Persons providing services on the project ("Subcontractor" in 406.096) - includes all persons or entities performing all or part of the services the Contractor has undertaken to perform on the project, regardless of whether that person contracted directly with the Contractor and regardless of whether that person has employees. This includes, without limitation, independent Contractors, Subcontractors, leasing companies, motor carriers, owner-operators, employees of any such entity, or employees of any entity which furnishes persons to provide services on the project. "Services" include, without limitation, providing, hauling, or delivering equipment or materials, or providing labor, transportation, or other service related to a project. "Services" does not include activities unrelated to the project, such as food/beverage vendors, office supply deliveries, and delivery of portable toilets.

B. The Contractor shall provide coverage, based on proper reporting of classification codes and payroll amounts and filing of any coverage agreements, which meets the statutory requirements of Texas Labor Code, Section 401.011(44) for all employees of the Contractor providing services on the project, for the duration of the project.

C. The Contractor must provide a certificate of coverage to the governmental entity prior to being awarded the contract.

D. If the coverage period shown on the Contractor's current certificate of coverage ends during the duration of the project, the Contractor must, prior to the end of the coverage period, file a new certificate of coverage with the governmental entity showing that coverage has been extended.

E. The Contractor shall obtain from each person providing services on a project, and provide to the governmental entity:

(1) a certificate of coverage, prior to that person beginning work on the project, so the governmental entity will have on file certificates of coverage showing coverage for all persons providing services on the project; and

(2) no later than seven days after receipt by the Contractor, a new certificate of coverage showing extension of coverage, if the coverage period shown on the current certificate of coverage ends during the duration of the project.

F. The Contractor shall retain all required certificates of coverage for the duration of the project and for one year thereafter.

G. The Contractor shall notify the governmental entity in writing by certified mail or personal delivery, within 10 days after the Contractor knew or should have known, of any change that materially affects the provision of coverage of any person providing services on the project.

H. The Contractor shall post on each project site a notice, in the text, form and manner prescribed by the Texas Workers' Compensation Commission, informing all persons providing services on the project that they are

required to be covered, and stating how a person may verify coverage and report lack of coverage.

I. The Contractor shall contractually require each person with whom it contracts to provide services on a project, to:

(1) provide coverage, based on proper reporting of classification codes and payroll amounts and filing of any coverage agreements, which meets the statutory requirements of Texas Labor Code, Section 401.011(44) for all of its employees providing services on the project, for the duration of the project;

(2) provide to the Contractor, prior to that person beginning work on the project, a certificate of coverage showing that coverage is being provided for all employees of the person providing services on the project, for the duration of the project;

(3) provide the Contractor, prior to the end of the coverage period, a new certificate of coverage showing extension of coverage, if the coverage period shown on the current certificate of coverage ends during the duration of the project;

(4) obtain from each other person with whom it contracts, and provide to the Contractor:

(a) a certificate of coverage, prior to the other person beginning work on the project; and

(b) a new certificate of coverage showing extension of coverage, prior to the end of the coverage period, if the coverage period shown on the current certificate of coverage ends during the duration of the project;

(5) retain all required certificates of coverage on file for the duration of the project and for one year thereafter;

(6) notify the governmental entity in writing by certified mail or personal delivery, within 10 days after the person knew or should have known, of any change that materially affects the provision of coverage of any person providing services on the project; and

(7) contractually require each person with whom it contracts, to perform as required by paragraphs (1) - (7), with the certificates of coverage to be provided to the person for whom they are providing services.

J. By signing this contract or providing or causing to be provided a certificate of coverage, the Contractor is representing to the governmental entity that all employees of the Contractor who will provide services on the project will be covered by workers' compensation coverage for the duration of the project, that the coverage will be based on proper reporting of classification codes and payroll amounts, and that all coverage agreements will be filed with the appropriate insurance carrier or, in the case of a self-insured, with the commission's Division of Self-Insurance

Regulation. Providing false or misleading information may subject the Contractor to administrative penalties, criminal penalties, civil penalties, or other civil actions.

K. The Contractor's failure to comply with any of these provisions is a breach of contract by the Contractor which entitles the governmental entity to declare the contract void if the Contractor does not remedy the breach within ten days after receipt of notice of breach from the governmental entity."

SC-6.10 Make the following modifications to 6.10 *Taxes*

A. Add the following to Paragraph 6.10.A.

"The Owner qualifies as an exempt agency as defined by the statutes of the State of Texas. The Contractor shall comply with all statutes and rulings of the State Comptroller."

SC-6.11 Make the following modifications to 6.11 *Use of Site and Other Areas*

A. Delete Paragraphs 6.11.A.3 entirely and insert the following in its place:

"3. **TO THE FULLEST EXTENT PERMITTED BY LAWS AND REGULATIONS, CONTRACTOR SHALL INDEMNIFY AND HOLD HARMLESS OWNER, AND THE OFFICERS, DIRECTORS, MEMBERS, PARTNERS, EMPLOYEES, AGENTS, CONSULTANTS AND SUBCONTRACTORS OF EACH AND ANY OF THEM FROM AND AGAINST ALL CLAIMS, COSTS, LOSSES, AND DAMAGES (INCLUDING BUT NOT LIMITED TO ALL FEES AND CHARGES OF ENGINEERS, ARCHITECTS, ATTORNEYS, AND OTHER PROFESSIONALS AND ALL COURT OR ARBITRATION OR OTHER DISPUTE RESOLUTION COSTS) ARISING OUT OF OR RELATING TO ANY CLAIM OR ACTION, LEGAL OR EQUITABLE, BROUGHT BY ANY SUCH OWNER OR OCCUPANT AGAINST OWNER, , OR ANY OTHER PARTY INDEMNIFIED HEREUNDER TO THE EXTENT CAUSED BY OR BASED UPON CONTRACTOR'S PERFORMANCE OF THE WORK.**

SC-6.13 Make the following modifications to 6.16 *Safety and Protection*

B. Add the following to Paragraph 6.13.F.

"The Contractor's duties and responsibilities for the safety or protection of persons or the Work or property at the Site or adjacent thereto shall be reinstated when any additional efforts are required during the one year correction period to correct defects in the Work."

SC-6.16 Make the following modifications to 6.16 *Emergencies*

A. Delete paragraph 6.16.A. entirely and insert the following in its place:

"A. In emergencies affecting the safety or protection of persons or the Work or property at the Site or adjacent thereto, Contractor is obligated to act to prevent threatened damage, injury, or loss. Contractor shall give Owner prompt written notice if Contractor believes that any significant changes in the Work or variations from the Contract Documents have been caused thereby or are required as a result thereof. If Owner determines that a change in the Contract Documents is required because of the action taken by Contractor in response to such an emergency, a Change Order may be issued."

SC-6.17 Make the following modifications to 6.17 *Shop Drawings and Samples*

A. Delete paragraph 6.17.C.3. entirely and insert the following in its place:

"3. With each submittal, Contractor shall give Engineer specific written notice of any variations that the Shop Drawing or Sample may have from the requirements of the Contract Documents on a Shop Drawing Deviation Request form provided by the Engineer and request Change Order be issued for each of the specific variations submitted for approval. This notice shall be both a written communication separate from the Shop Drawings or Sample submittal; and, in addition, by a specific notation made on each Shop Drawing or Sample submitted to Engineer for review and approval of each such variation."

B. Delete paragraph 6.17.D.3. entirely and insert the following in its place:

"3. Engineer's review and approval shall not relieve Contractor from responsibility for any variation from the requirements of the Contract Documents unless Contractor has complied with the requirements of Paragraph 6.17.C.3 and Engineer has given written approval of each such variation issuing a Field Order or Change Order. If the proposed modification is approved by the Engineer, the submittal will be considered to be in strict compliance with the Contract Documents and it will be reviewed in accordance with the Contract Documents. If the proposed Modification is not approved, the submittal will be returned to the Contractor with appropriate comments. Engineer's review and approval shall not relieve Contractor from responsibility for complying with the requirements of Paragraph 6.17.C.1."

C. Delete paragraph 6.17 E.1. entirely and insert the following in its place:

"1. Contractor shall make corrections required by Engineer and shall return the required number of corrected copies of Shop Drawings and submit, as required, new Samples for review and approval. Re-submittals shall reference and respond directly to Engineer's previous comments. Any variations from strict compliance with the Contract Documents will be identified in the same manner as required in paragraph 6.17.C.3 and will require the same approvals."

D. Add the following new paragraphs immediately after Paragraph 6.17.E:

"F. Contractor shall furnish required submittals with sufficient information and accuracy in order to obtain required approval of an item with no more than two submittals. Engineer will record Engineer's time for reviewing subsequent submittals of Shop Drawings, samples, or other items requiring approval and Contractor shall reimburse Owner for Engineer's charges for such time.

G. In the event that Contractor requests a change of a previously approved item, Contractor shall reimburse Owner for Engineer's charges for its review time unless the need for such change is beyond the control of Contractor."

SC-6.18 Make the following modifications to 6.18 *Continuing the Work*

A. Add the following to paragraph 6.18.A.

"Contractor assumes and bears responsibility for all costs and time delays associated with any variation from the requirements of the Contract Documents."

SC-6.20 Make the following modifications to 6.20 *Indemnification*

A. Delete paragraph 6.20.A entirely and insert the following in its place:

"A. **TO THE FULLEST EXTENT PERMITTED BY LAWS AND REGULATIONS, CONTRACTOR SHALL INDEMNIFY AND HOLD HARMLESS OWNER AND ENGINEER, AND THE OFFICERS, DIRECTORS, MEMBERS, PARTNERS, EMPLOYEES, AGENTS, CONSULTANTS AND SUBCONTRACTORS OF EACH AND ANY OF THEM FROM AND AGAINST ALL CLAIMS, COSTS, LOSSES, AND DAMAGES (INCLUDING BUT NOT LIMITED TO ALL FEES AND CHARGES OF ENGINEERS, ARCHITECTS, ATTORNEYS, AND OTHER PROFESSIONALS AND ALL COURT OR ARBITRATION OR OTHER DISPUTE RESOLUTION COSTS) ARISING OUT OF OR RELATING TO THE PERFORMANCE OF THE WORK, PROVIDED THAT ANY SUCH CLAIM, COST, LOSS, OR DAMAGE IS ATTRIBUTABLE TO BODILY INJURY, SICKNESS, DISEASE, OR DEATH, OR TO INJURY TO OR DESTRUCTION OF TANGIBLE PROPERTY (OTHER THAN THE WORK ITSELF), INCLUDING THE LOSS OF USE RESULTING THEREFROM BUT ONLY TO THE EXTENT CAUSED BY ANY NEGLIGENT ACT OR OMISSION OF CONTRACTOR, ANY SUBCONTRACTOR, ANY SUPPLIER, OR ANY INDIVIDUAL OR ENTITY DIRECTLY OR INDIRECTLY EMPLOYED BY ANY OF THEM TO PERFORM ANY OF THE WORK OR ANYONE FOR WHOSE ACTS ANY OF THEM MAY BE LIABLE."**

B. Delete paragraph 6.20.C entirely.

SC 7.04 Add the following new paragraph immediately after paragraph GC 7.03:

"7.04 Claims between Contractors

A. Should Contractor cause damage to the work or property of any other contractor at the Site, or should any claim arising out of Contractor's performance of the Work at the Site be made by any other contractor against Contractor, Owner, Engineer, or the construction coordinator, then Contractor (without involving Owner, Engineer, or construction coordinator) shall either (1) remedy the damage, (2) agree to compensate the other contractor for remedy of the damage, or (3) remedy the damage and attempt to settle with such other contractor by agreement, or otherwise resolve the dispute by arbitration or at law.

B. **CONTRACTOR SHALL, TO THE FULLEST EXTENT PERMITTED BY LAWS AND REGULATIONS, INDEMNIFY AND HOLD HARMLESS OWNER, ENGINEER, AND THE OFFICERS, DIRECTORS, PARTNERS, EMPLOYEES, AGENTS AND OTHER CONSULTANTS AND SUBCONTRACTORS OF EACH AND ANY OF THEM FROM AND AGAINST ALL CLAIMS, COSTS, LOSSES AND DAMAGES (INCLUDING, BUT NOT LIMITED TO, FEES AND CHARGES OF ENGINEERS, ARCHITECTS, ATTORNEYS, AND OTHER PROFESSIONALS AND COURT AND ARBITRATION COSTS) ARISING DIRECTLY, INDIRECTLY OR CONSEQUENTIALLY OUT OF ANY ACTION, LEGAL OR EQUITABLE, BROUGHT BY ANY OTHER CONTRACTOR AGAINST OWNER, ENGINEER, OR CONSULTANTS, TO THE EXTENT SAID CLAIM IS BASED ON OR ARISES OUT OF CONTRACTOR'S PERFORMANCE OF THE WORK. SHOULD ANOTHER CONTRACTOR CAUSE DAMAGE TO THE WORK OR PROPERTY OF CONTRACTOR OR SHOULD THE PERFORMANCE OF WORK BY ANY OTHER CONTRACTOR AT THE SITE GIVE RISE TO ANY OTHER CLAIM, CONTRACTOR SHALL NOT INSTITUTE ANY ACTION, LEGAL OR EQUITABLE, AGAINST OWNER AND ENGINEER, OR PERMIT ANY ACTION AGAINST ANY OF THEM TO BE MAINTAINED AND CONTINUED IN ITS NAME OR FOR ITS BENEFIT IN ANY COURT OR BEFORE ANY ARBITER WHICH SEEKS TO IMPOSE LIABILITY ON OR TO RECOVER DAMAGES FROM OWNER OR ENGINEER, ON ACCOUNT OF ANY SUCH DAMAGE OR CLAIM.**

C. If Contractor is delayed at any time in performing or furnishing the Work by any act or neglect of another contractor, and Owner and Contractor are unable to agree as to the extent of any adjustment in Contract Times attributable thereto, Contractor may make a Claim for an extension of times in accordance with Article 12. An extension of the Contract Times shall be Contractor's exclusive remedy with respect to Owner and Engineer, for any delay, disruption, interference, or hindrance caused by any other contractor. This paragraph does not prevent recovery from Owner or Engineer for activities that are their respective responsibilities.

SC-8.02 Make the following modifications to 8.02 *Replacement of ENGINEER*

A. Amend paragraph 8.02.A. by striking out the following words:

"to whom CONTRACTOR makes no reasonable objection"

SC-9.04 Make the following modifications to 9.04 *Authorized Variations in Work*

A. Add the following to Paragraph 9.04.A:

"The Contractor shall notify the Engineer in writing prior to beginning any Work addressed in a Field Order if the Contractor does not agree that the Work involved represents no additional cost and/or time change in the Contract Documents."

SC-9.08 Make the following modifications to 9.08 *Decisions on Requirements of Contract Documents and Acceptability of Work*

A. Delete paragraph 9.08.B entirely.

B. Delete paragraph 9.08.C entirely.

C. Delete paragraph 9.08.D entirely.

SC-10.03 Make the following modifications to 10.03 *Execution of Change Orders*

A. Add a new paragraph "B" as follows:

"B. Contractor assumes and bears responsibility for all costs and time delays associated with any variation from the requirements of the Contract Documents unless the variation is specifically approved by Change Order."

SC-10.05 Make the following modifications to 10.05 *Claims*

A. Delete paragraph 10.05.A entirely and insert the following in its place:

"A. *Owner's Decision Required*: All Claims, except those waived pursuant to Paragraph 14.09, shall be referred to the Owner for a decision."

B. Delete paragraph 10.05.B entirely and insert the following in its place:

"B. *Notice:* Written notice stating the general nature of each Claim shall be delivered by the Contractor to Owner promptly (but in no event later than 7 days) after the start of the event giving rise thereto. The responsibility to substantiate a Claim shall rest with the Contractor. Notice of the amount or extent of the Claim, with supporting data shall be delivered to the Owner within 30 days after the start of such event. A Claim for an adjustment in Contract Price shall be prepared in accordance with the provisions of Paragraph 12.01.B. A Claim for an adjustment in Contract Times shall be prepared in accordance with the provisions of Paragraph 12.02.B. Each Claim shall be accompanied by Contractor's written statement that the adjustment claimed is the entire adjustment to which the claimant believes it is entitled as a result of said event."

C. Delete paragraph 10.05.C entirely and insert the following in its place:

"C. *Owner's Action*: Owner will review each Claim and, within 30 days take one of the following actions in writing:

1. deny the Claim in whole or in part; or
2. approve the Claim."

D. Delete paragraph 10.05.D. in its entirety.

E. Delete paragraph 10.05.E. in its entirety.

SC-11.01 Make the following modifications to 11.01 *Cost of the Work*

A. Amend paragraph 11.01.A by deleting the following words in the third sentence:

" those prevailing in the locality of the Project, shall not include any of the costs itemized in Paragraph 11.01.B, and shall include only the following items:"

and insert the following in its place:

"those paid for the Work included in the Contract Price, shall include only the following items, and shall not include any of the costs itemized in paragraph 11.01 B. Contractor shall provide certified payroll records listing personnel classifications and salaries for all individuals involved in additional Work. Salaries for those not included in the certified payroll will be considered as being compensated under paragraph 11.01 B, and shall include only the following items:"

B. Amend paragraph 11.01.A.1 by deleting the following words in the second sentence:

"without limitation, superintendents, foremen,"

and inserting the following in its place:

"one foreman (unless agreed upon prior to beginning Work)"

C. Amend paragraph 11.01.A.1 by deleting the following words in the last sentence:

"be included in the above to the extent authorized by Owner."

and inserting the following in its place:

"not exceed 1.5 times regular pay and shall be included in the above to the extent authorized by Owner in writing."

D. Amend paragraph 11.01.B.1 by adding "superintendents" to the list of excluded personnel in the first sentence:

E. Amend paragraph 11.01.D by inserting "and at intervals" in the last sentence as shown below:

"..... and submit in a form and at intervals acceptable to Engineer ..."

SC-11.03 Make the following modifications to 11.03 *Unit Price Work*

A. Delete paragraph 11.03.D entirely and insert the following in its place:

"D. The unit price of an item of Unit Price Work shall be subject to reevaluation and adjustment under the following conditions:

1. If the total cost of a particular item of Unit Price Work amounts to twenty percent (20%) or more of the total Contract Price and the variation in the quantity of that particular item of Unit Price Work performed by the Contractor differs by more than twenty percent (20%) from the estimated quantity of such item indicated in the Agreement; and
2. If there is no corresponding adjustment with respect to any other item of Work; and
3. If Contractor believes that Contractor has incurred additional expense as a result thereof; or if Owner believes that the quantity variation entitles Owner to an adjustment in the Unit Price, either the Owner or Contractor may make a claim for an adjustment in the Contract Price in accordance with Article 11 if the parties are unable to agree as to the effect of any such variation in the quantity of the Unit Price Work performed."

SC-12.01 Make the following modifications to 12.01 *Change of Contract Price*

A. Amend paragraph 12.01.A. by adding the following words after the last sentence:

"Change Orders must be in compliance with the Texas Government Code, the Texas Local Government Code and any other laws or regulations."

SC-12.03 Make the following modifications to 12.03 *Delays*

A. Add the following to Paragraph 12.03.A.

"No time extensions will be allowed for weather conditions for Projects using calendar days for the Contract Time."

SC-12.04 Make the following modifications to ARTICLE 12 – CHANGE OF CONTRACT PRICE; CHANGE OF CONTRACT TIME

A. Add a new paragraph "12.04" as follows:

"12.04 No Damage for Delays

A. The Contractor agrees to make no claims for damage for delay in the performance of the Contract occasioned by any act or omission to act of the Owner, Engineer, or any of the Engineer's or Owner's agents, and agrees that any such claim shall be fully compensated by an extension of time, as set forth in a Change Order, to complete performance of the work as provided herein."

SC-13.03 Make the following modifications to 13.03 *Tests and Inspections*

A. Delete paragraph 13.03 B entirely and insert the following in its place:

"B. The Contractor must employ and pay for the services of an independent testing laboratory to perform all inspections, tests, or approvals required by the Contract Documents. The Contractor is solely responsible for maintaining that the quality of work is in accordance with the Contract Documents. The Contractor shall be responsible for the notification and scheduling required assuring that a certified technician from the testing laboratory is present during all sampling and testing procedures required in the Contract Documents. The Contractor shall not proceed with construction work requiring such testing without the presence of the laboratory's certified technician. The Owner, at his option, may perform additional tests as quality monitoring. Quality monitoring activities of the Owner and Engineer, or failure on the part of the Owner or Engineer to perform tests on constructed works, in no way relieves the Contractor of the obligation to perform work and furnish materials conforming to the Contract Documents.

1 Contractor's Responsibilities

a. Control the quality of work produced and verify that the work performed meets the standards of quality established in the Contract Documents.

1. Inspect and verify conformance of all materials furnished and work performed, whether by the Contractor, its subcontractors or its suppliers.

2. Provide and pay for the services of a testing laboratory approved by Owner to insure that products proposed for use fully comply with the Contract Documents.

3. Perform tests as indicated in this and other sections of the specifications. Schedule the time and sequence of testing with the Owner and Engineer. Testing is to be observed by the Owner, Engineer, or designated representative.

4. Promptly replace any defective materials and/or construction work incorporating defective materials or workmanship.

5. Provide Certified Test Reports as required by the SUBMITTALS section and paragraph 3 of this supplementary conditions. Reports are to indicate that materials and construction are in compliance with the Contract Documents.

b. Assist the Engineer, Owner, and Owner's testing organization to perform quality monitoring activities.

2. Quality Monitoring Activities by the Owner

a. Quality Monitoring activities of the Owner and Engineer through their own forces or through contracts with materials testing laboratories and survey crews are for the Owner's use in monitoring the results of the Contractor's work and quality control activities, if deemed necessary

by the Owner and Engineer. The Quality Monitoring activities of the Owner do not relieve the Contractor of its responsibility to provide testing in accordance with the requirements of the Contract Documents or to provide materials and construction work complying with the Contract Documents.

3. Submittals
   a. Submittals shall be accordance with the SUBMITTALS section, and shall include:
      1. The name of the proposed primary and secondary testing laboratories along with documentation of qualifications, a list of tests that can be performed, and a list of the certified laboratory technicians and the licensed engineers who will be performing the sampling and testing for the Construction Work along with their certifications and licenses.
      2. Test reports per Paragraph 7, TEST REPORTS of this supplementary condition.
4. Standards
   a. Provide a testing laboratory that complies with the ASTM (American Society of Testing Materials) and/or ACIL (American Council of Independent Laboratories) "Recommended Requirements for Independent Laboratory Qualifications", or other specified testing organizations.
   b. Perform tests listed in the specifications.
5. Delivery and Storage
   a. Handle and protect test specimens of products and construction materials at the construction site in accordance with ASTM or other applicable testing procedures.
6. Verification Testing
   a. Provide verification testing when tests performed by the Owner indicate that materials or the results of construction activities are not in conformance with Contract Documents.
   b. Verification testing is to be provided at the Contractor's expense to verify products or constructed works are in compliance after corrections have been made.
   c. Tests must comply with recognized methods or with methods recommended by the Owner's testing laboratory and approved by the Engineer.
7. Test Reports
   A. Test reports are to be prepared for all tests.

1. Tests performed by testing laboratories may be submitted on their standard test report forms. These reports must include the following:
   a. Name of the Owner, project title and number, equipment installer and general contractor.
   b. Name of the laboratory, address, and telephone number.
   c. Name and signature of the certified laboratory personnel performing the sampling and testing.
   d. Date and time of sampling, inspection, and testing.
   c. Date the report was issued.
   d. Description of the test performed.
   e. Weather conditions and temperature at time of test or sampling.
   f. Location at the site or structure where the test was taken.
   g. Standard or test procedure used in making the test.
   h. A description of the results of the test.
   i. Statement of compliance or non-compliance with Contract Documents.
   j. Interpretations of test results, if appropriate.

B Distribute copies of the test reports to:

Owner	1 copies
Contractor	1 copy

8. Non-Conforming Work
   a. Contractor shall promptly correct any work that is not in compliance with the Contract Documents and shall immediately notify the Owner when the corrective work will be performed.
   b. Payment for non-conforming work shall be withheld until such work is corrected or replaced with work complying with the Contract Documents.

SC-13.04 Make the following modifications to 13.04 *Uncovering Work*

A. Amend paragraph 13.04.B by adding the following after Engineer's request:

"with Owner's written approval,"

B. Amend paragraph 13.04.D by adding:

"This paragraph does not apply to Work uncovered pursuant to paragraph 13.04.A."

SC-13.07 Make the following modifications to 13.07 *Correction Period*

A. Amend paragraph 13.07.A by adding:

"When early acceptance of a Substantially Completed portion of the Work is accomplished in the manner indicated, the correction period for that portion of the Work shall commence at the time of substantial completion of that Work."

SC-14.02 Make the following modifications to 14.02 *Progress Payments*

A. Amend paragraph 14.02 C.1. by deleting "Ten" and inserting "Thirty" in its place.

B. Amend paragraph 14.02.D.1. by deleting "or" in paragraph 14.02.D.1.c. and adding new paragraphs "e", "f", "g", and "h" as follows:

"e. Owner has been notified of failure to make payments to Subcontractors or Suppliers or for labor, or

f. failure to submit up-to-date record documents as required by GC-6.12, or

g. failure to submit monthly progress schedule updates or revised schedules as requested by the Owner or Engineer, or

h. failure to provide Project photographs required by Specifications."

C. Amend paragraph 14.02.D.2. by adding "to Owner's satisfaction."

D. Amend paragraph 14.02.D.3 by deleting "and subject to interest as provided in the Agreement."

E. Add a new paragraph "14.02.D.4" as follows:

"4. Owner may permanently withhold payment from Contract Price for

a. liquidated damages incurred by Contractor, if any;

b. Costs for tests performed by the Owner to verify that work previously tested and found to be defective has been corrected. Verification testing is to be provided at the Contractor's expense to verify products or constructed works are in compliance after corrections have been made."

SC-14.04 Make the following modifications to 14.04 *Substantial Completion*

A. Amend the third sentence of paragraph 14.04.C. by deleting "seven" and replacing it with "thirty."

SC-14.09 Make the following modification to 14.09 *Waiver of Claims*

A. Delete Paragraph 14.09.A.1 entirely.

SC-15.01 Make the following modifications to 15.01 *Owner May Suspend Work*

A. Amend the first sentence of paragraph 15.01.A. to read as follows:

"At any time and without cause, OWNER may suspend the Work or any portion thereof for an initial period of 90 consecutive days, which may be extended for 30-day periods thereafter, by notice in writing to CONTRACTOR and ENGINEER which will fix the date on which Work will be resumed."

SC-15.02 Make the following modifications to 15.02 *Owner May Terminate for Cause*

A. Amend Paragraph 15.02.C. by deleting the following sentence:

"Such claims, costs, losses, and damages incurred by Owner will be reviewed by Engineer as to their reasonableness and, when so approved by Engineer, incorporated in a Change Order."

B. Add a new paragraph "A.5" as follows:

"5. If any petition of bankruptcy is filed by or against Contractor, or if Contractor is adjudged as bankrupt or insolvent or makes a general assignment for the benefit of creditors, or if a receiver is appointed for the benefit of Contractor's creditors, or if a receiver is appointed on account of Contractor's insolvency, upon the occurrence of any such event, Owner shall be entitled to request of Contractor or its successor in interest adequate assurance of future performance in accordance with the terms and conditions hereof. Failure to comply with such request within seven (7) days of delivery of the request shall entitle Owner to terminate this agreement and to the accompanying rights set forth in Paragraphs 15.02 and 15.03 hereof. In all events pending receipt of adequate assurance of performance and actual performance in accordance therewith, Owner shall be entitled to proceed with the Work with its own forces or with other Contractors on a time and material or other appropriate basis. The cost of work by Owner or other Contractors will be back charged against the Contract Sum hereof."

C. Delete paragraph 15.02.F. entirely.

SC-15.03 Make the following modifications to 15.03 *Owner May Terminate For Convenience*

A. Amend paragraph 15.03.A.1 by adding the following language to the end of the last sentence:

"if Work is not based on Unit Prices."

B. Delete paragraph 15.03.A.3 in its entirety.

C. Delete paragraph 15.03.A.4 entirely and insert the following in its place:

"4. Reasonable expenses approved by Owner directly attributable to termination."

SC-15.04 Make the following modifications to 15.04 *Contractor May Stop Work or Terminate*

A. Amend paragraph15.03.B by deleting the following language at the end of the first sentence:

"including interest thereon."

B. Add a new paragraph "C" as follows:

"C. This Contract may not be assigned in whole or in part by the Contractor without the previous written consent of the Owner."

SC-16.01 Make the following modifications to 16.01 *Methods and Procedures*

A. Delete paragraph 16.01 entirely and insert the following in its place:

"16.01 Methods and Procedures

A. Owner and Contractor may exercise such rights or remedies as either may otherwise have under the Contract Documents or by Law."

SC-17.02 Make the following modification to 17.02 *Computation of Times*

A. Add a new paragraph "B" as follows:

"B. All references and conditions for a "calendar day contract" in the General Conditions and Supplementary Conditions shall apply for a "Fixed Date Contract." A "Fixed Date Contract" is one in which the calendar dates for reaching substantial completion and/or final completion are specified in lieu of identifying the actual calendar days involved.

SC-17.05 Make the following modification to 17.05 *Controlling Law*

A. Delete paragraph 17.05 A entirely and insert the following in its place:

"A. Venue. Exclusive venue for any action or claim arising out of this Agreement will be in Comal County, Texas."

SC-17.06 Make the following modification to 17.06 *Headings*

A. Delete paragraph 17.06 A entirely and insert the following in its place:

"A. The Article and paragraph headings in this Agreement are inserted for convenience only and do not constitute parts of these General Conditions or as a limitation of the scope of the particular section to which they refer. This Agreement will be fairly interpreted in accordance with its terms and conditions and not for or against either Party."

SC-17.07 Make the following modifications to ARTICLE 17 – MISCELLANEOUS

A. Add a new paragraph "17.07" as follows:

"17.07 Independent Contractor

A. Each Party will perform its duties under this Agreement as an independent contractor. The Parties and their personnel will not be considered to be employees or agents of the other Party. Nothing in this Agreement will be interpreted as granting either Party the right or authority to make commitments of any kind for the other. This Agreement will not constitute, create, or be interpreted as a joint venture, partnership or formal business organization of any kind."

B. Add a new paragraph "17.08" as follows:

"17.08 Immunity

A. No provision of this agreement shall affect or waive any sovereign or governmental immunity available to the County and/or its elected officials, officers, employees and agents under Federal or Texas law nor waive any defenses or remedies at law available to the County and/or its elected officials, officers, employees and agents under Federal or Texas law."

C. Add a new paragraph "17.09" as follows:

"17.09 Severability

A. If a court of competent jurisdiction renders any part of this Agreement invalid or unenforceable, that part will be severed and the remainder of this Agreement will continue in full force and effect."

E. Add a new paragraph "17.10" as follows:

"17.10 No Third Party Beneficiaries

A. Nothing in this Agreement shall be construed to create any right in any third party not a signatory to this Agreement, and the parties do not intend to create any third party beneficiaries by entering into this Agreement."

F. Add a new paragraph "17.11" as follows:

"17.11 Warranties

A. The Contractor warrants to the Owner and Architect that materials and equipment furnished under the Contract will be of good quality and new unless otherwise required or permitted by the Contract Documents, that the Work will be free from defects not inherent in the quality required or permitted, and that the Work will conform to the requirements of the Contract Documents. Work not conforming to these requirements, including substitutions not properly approved and authorized, may be considered defective. The Contractor's warranty excludes remedy for damage or defect caused by abuse, modifications not executed by the Contractor, improper or insufficient maintenance, improper operation, or normal wear and tear and normal usage. If required by the Architect, the Contractor will furnish satisfactory evidence as to the kind and quality of materials and equipment. The Contractor further warrants to the Owner that the Work will be performed and completed in a good and workmanlike manner, in accordance with the Contract Documents, all applicable building codes, good engineering and construction practices provided that the design meets all applicable building codes and good engineering practices. The Contractor will correct Work with errors, omissions, defects or deviations from the Contract Documents, without additional cost to Owner.

B. All warranties will include labor and materials and will be signed by the manufacturer and/or subcontractor as the case may be and countersigned by Contractor. All warranties will be delivered to the Owner's Representative upon completion of the Work and before the submission of request for final payment. At the time of final completion of the Work, the Contractor agrees to assign to the Owner any and all manufacturers' warranties relating to materials and labor used in the Work and further agrees to perform the Work in such a manner as to preserve any and all such manufacturers' warranties.

C. The Contractor represents, warrants and covenants to the Owner that it is fully licensed, certified and authorized to enter into the Contract and that it and the Subcontractors are and will continue to be fully licensed, certified and authorized to perform the Work contemplated by the Contract Documents and any other work performed at the Project, and will provide evidence of the same to the Owner upon request."

G. Add a new paragraph "17.12" as follows:

"17.12 Equal Opportunity

A. The Contractor and its Subcontractors will not discriminate against any employee or applicant for employment because of race, religion, color, sex or national origin. Contractor will take affirmative action to ensure that applicants are employed, and that employees are treated during employment, without regard to race, religion, color, sex, or national origin. Contractor will post in conspicuous places, available to employees and applicants for employment, notices setting forth the policies of nondiscrimination.

B. The Contractor and all Subcontractors will, in all solicitations or advertisements for employees by them, state that all qualified applicants will receive consideration for employment without regard to race, religion, color, sex or national origin.

H. Add a new paragraph "17.13" as follows:

"17.13 Wage Rates

A. Attention is called to the Texas Government Code, Title 10 General Government, Subtitle F, Chapter 2258. This Article requires the Contractor and any subcontractor under him to pay not less than the prevailing rates per diem wages in the locality of the work at the time of construction to all laborers, workmen and mechanics employed by them in the execution of the Contract. Bidders should familiarize themselves with the entire provisions of this law and the penalties provided for its violation before submitting their bids.

B. In accordance with this Article, the Owner has established a schedule of prevailing wage rates which is published in paragraph F of this

section, and not less than these established rates must be paid on the project. Any workers not included in the schedule shall be properly classified and paid not less than the rate of wages prevailing in the locality of the work at the time of construction.

C. For overtime work and legal holidays, the hourly rate shall be one and one-half times the Basic Hourly Rate.

D. The Contractor shall forfeit as a penalty of the Owner the amount of sixty dollars ($60.00) for each laborer, workman or mechanic employed, for each calendar day or portion thereof such laborer, workman or mechanic is paid less than the stipulated rates for any work done under this Contract, by him or by any subcontractor under him.

E. No portion of this provision shall be construed to prohibit the payment to any laborer, workman, or mechanic employed on the Work of more than the stated wage rate. It shall be the responsibility of the Contractor to maintain an adequate work force whether higher wages are required or not.

F. Wages shall be paid in accordance with the Davis Bacon Wage Rages. http://www.dot.nd.gov/manuals/civilrights/davisbacon.pdf

END OF SECTION

1. Payment

A. Classification Definitions, Building and Highway-Heavy

Definitions for Building Construction and Highway-Heavy classifications shall conform to the current "Dictionary of Occupational Titles" as published by the U.S. Department of Labor.

B. Minimum Wages

Workers on Project shall be paid not less than wage rates, including fringe benefits, as published by the Department of Labor (DOL) for Building Construction and Highway Heavy Trades. Such wage rates shall be used throughout the Contract. If a classification is to be used, which is not listed in the attached wage rates, CONTRACTOR shall submit to OWNER rates and classification proposed for use, for approval, prior to performance of the Work.

NOTE: The terms journeyman and apprentice apply to both union and independent workers, and are not intended to imply that these positions are union workers only.

All laborers and mechanics working upon the Work for this Project shall be paid unconditionally and without subsequent deduction or rebate on any account (except such payroll deductions as are permitted by regulations issued by Secretary of Labor under the Copeland Act, Title 29 CFR, Part 3) full wages accrued and when due, computed at rates not less than wage rates bound herein pertaining to type of Work being performed. When Work is of such a nature that both Building and Highway-Heavy wage scales are incorporated into contract, CONTRACTOR shall pay wage rates to mechanics or laborers performing Work in more than one classification at the rate indicated for each classification for time actually worked as determined by area practice applicable to type (Site Construction Crafts or Building Construction Crafts) of Work being performed without regards to skill. Salaried specialists (project superintendent and administrative personnel only) in the permanent employment of CONTRACTOR do not fall under any Wage Classification. Wage rates shall be posted by CONTRACTOR at site(s) of Work in prominent, easily accessible places where they can be seen by <u>all</u> workers.

C. Overtime Requirements

No CONTRACTOR, Subcontractor, or Sub-subcontractor contracting for any part of contract Work which may require or involve the employment of laborers or mechanics shall require or permit any laborer or mechanic in any workweek in which he is employed on such Work, to work in excess of forty hours in such workweek unless such laborer or mechanic receives compensation at a rate not less than one and one-half times his basic rate of pay for all hours in excess of forty hours in such workweek.

2. Apprentices

Locally & Federally Funded Projects

Apprentices and Trainees will be permitted to work as such only when they are registered, individually, under a bonafide Apprenticeship or Trainee program registered with the Bureau of Apprenticeship and Training, United States Department of Labor. The allowable ratio of Apprentices or Trainees to journeymen in any craft classification shall not be greater than the ratio permitted to CONTRACTOR as stated in the registered apprenticeship program

standards. Any employee listed on a payroll at an Apprentice or Trainee wage rate, who is not registered as above, shall be paid the wage rate provided in Contract for Work employee actually performed. CONTRACTOR, Subcontractor, or Sub-subcontractor shall furnish to OWNER written evidence of registration of his program for Apprentices and Trainees as well as of the appropriate ratios and wage rates, for the area of construction prior to using any Apprentices or Trainees on this Contract.

3. Withholding of Payments

OWNER may withhold or cause to be withheld from CONTRACTOR as much of the accrued payments as necessary to pay laborers and mechanics employed by CONTRACTOR, Subcontractors, or Sub-subcontractors the amount of wages required to comply with the Contract. In the event of nonpayment of wages to laborers or mechanics working on the site of the Work of this Contract, OWNER may, after Written Notice to CONTRACTOR, take such action as may be necessary to cause suspension of any further payments or advance of funds to CONTRACTOR until such violations have ceased and until restitution has been made. Payments may also be withheld if CONTRACTOR fails to maintain weekly payroll reports or fails to provide copies in a timely manner upon request of Owner.

4. Payrolls

A. CONTRACTOR shall keep records showing:

1. the name and occupation of each worker employed by the CONTRACTOR or subcontractor(s) in the construction of the public work;

2. the actual per diem wages paid to each worker; and

3. Employee Certification. CONTRACTOR, Subcontractor, and Sub-subcontractor shall identify in writing, the classification agreed to by all laborers and mechanics employed by them in the execution of the Contract, and pay not less than rates specified in the attached Building Construction and Highway Heavy Wage Rate Schedule(s). If work performed by worker is different than the classification agreed upon, the worker shall be paid no less than the minimum wage for work performed.

B. The record shall be open at all reasonable hours to inspection by the officers and agents of the Owner as requested. CONTRACTOR will be responsible to provide copies of records as requested by the Owner within two (2) working days. Payrolls relating to this Work shall be maintained during term of Contract and preserved for a period of three (3) years thereafter by CONTRACTOR for all laborers and mechanics working on the Work.

C. A Statement of Compliance, a letter signed and dated by party responsible for supervising the payment of persons employed by CONTRACTOR or subcontractor shall accompany payrolls required by Owner. The Statement of Compliance letter shall identify but is not limited to:

1. name of signatory party and title,

2. name of project, payroll period, and

3. name of CONTRACTOR or Subcontractor.

The signed letter attests that the payroll complies with 29CFR issued by the Secretary of Labor.

5. Complaints and Penalties

A public body awarding a contract, and an agent or officer of the public body, shall, take cognizance of complaints of all violations of Chapter 2258 Texas Government Code Title 10 or applicable Federal Statutes committed in the execution of the contract; and withhold money forfeited or required to be withheld under this chapter from the payments to the CONTRACTOR under the contract. A CONTRACTOR or subcontractor(s) who violates this section shall pay to the political subdivision on whose behalf the contract is made, sixty dollars ($60) for each worker employed for each calendar day or part of the day that the worker is paid less than the wage rates stipulated in the contract. A public body shall use any money collected under this section to offset the costs incurred in the administration of this chapter.

Confirmed Disciplinary action taken by CONTRACTOR against employees who provide information during an interview or investigation by the Owner on wages received, may result in suspension or debarment from consideration of award of County contracts.

6. Area Practice

A. Highway Heavy Construction Rates shall be used on this Project, unless the Project consists primarily of Building Construction and Building Construction Rates are to be used.

1. Building Construction consists generally of all aspects of construction of buildings, which are sheltered enclosures with walk-in access for the purpose of housing persons, machinery, equipment or supplies, including without limitation the installation of utilities and equipment, both above and below grade level, as well as incidental demolition, grading, utilities, paving and other site work. Buildings need not be "habitable" to be classified as Building Construction and the installation of heavy machinery and/or equipment will not generally change a Building Construction project's classification.

2. The determination of Building Construction Wage Rates includes all construction trades and work necessary to complete a building, regardless of the number of contracts involved, so long as all such contracts are closely related in purpose, time and place.

B. For projects that involve both Building Construction and Highway-Heavy trades, the following classifications shall be used:

1. A multiple classification shall be used if Building Construction items are more than twenty percent (20%) of the Highway-Heavy project cost.

2. A multiple classification shall be used if Highway-Heavy Construction items are more than twenty percent (20%) of the Building Construction Project cost.

3. When multiple classifications are used, the Highway-Heavy Construction Rates are to be paid to workers engaged in site work determined to be five (5) feet beyond the building, extending to the property boundary or construction limits.

7. Texas Public Information Act

Unless covered by an exception to mandatory disclosure under the Texas Public Information Act, any and all documents submitted to the County of Comal become Public Records and are, therefore, subject to public disclosure.

End

STATE OF TEXAS
ROBERT H. BOYD
91702
LICENSED
PROFESSIONAL ENGINEER
4/13/16

1.0 General Specifications

1.1 These specifications shall cooperate with the accompanying plans in every detail, so that any item or any work that may be specified herein and not shown on the plans, or vice-versa, is to be executed the same as if occurring in both. Any items of labor or materials which are not shown on the drawings or mentioned in these specifications but are nevertheless necessary for the proper completion of the construction, are to be provided for by the CONTRACTOR in this bid.

1.2 Should any drawings or figures be omitted on the scale which are necessary for a clear and comprehensive understanding, it will be the duty if the CONTRACTOR to advise the proper parties and in no case proceed with work in uncertainty.

1.3 All labor is to be performed in a skillful, thorough manner.

1.4 All material to be of the dimension and grade as herein specified.

1.5 The CONTRACTOR and all SUBCONTRACTORS shall comply with all federal, state and local laws, codes and ordinances applicable to the work.

1.5.1 The CONTRACTOR has been provided a copy of the Water Pollution Abatement Plan (WPAP) Notice of Approval by the Texas Commission on Environmental Quality.

1.6 The CONTRACTOR shall protect all persons and property throughout the progress until the completion of the work.

1.6.1 Work shall proceed in such a manner as to minimize the spread of dust and flying particles and to provide safe working conditions for all personnel.

1.6.2 Work shall proceed in such a manner as will not interfere with existing surface drainage in the streets and areas adjacent to the project.

1.7 During the course of their work, all craftsmen and tradesmen shall protect all work which precedes theirs from damage and they shall make repairs and/or replacements of any damage caused either directly or indirectly by them.

1.8 CONTRACTOR is responsible for providing all necessary materials, labor and equipment to complete the project. All waste material must be removed from the site at the CONTRACTOR'S sole expense.

1.9 CONTRACTOR shall lay out and correctly establish all lines, levels, grades and positions of all parts of the work, and shall be responsible for their accuracy and proper correlation with existing control lines, monuments and data points. Control lines, monuments and data points shall be carefully preserved by the CONTRACTOR, and if displaced, shall be reset by the CONTRACTOR at the CONTRACTOR'S own expense. All such resetting work shall be subject to the OWNER's approval.

2.0 Waste Material Removal

2.1 CONTRACTOR shall remove all excess stormwater, rock gabions, debris, sand, and underground piping network.

2.2 All waste material shall be disposed of by CONTRACTOR at CONTRACTOR's sole expense.

3.0 New Concrete Wall

3.1 CONTRACTOR shall construct new concrete wall in accordance with the attached structural design plans and tie into existing wall and ramp in accordance with said structural plans.

4.0 Compacted Base Material

4.1 CONTRACTOR shall place material in no more than 6" lifts, compacted to 90% of proctor density.

4.2 Finished grade elevations for compacted base above the existing concrete floor have been provided on attached plans.

5.0 Concrete Floor

5.1 CONTRACTOR shall construct 6" concrete floor with #4 bars at 12" on center (both ways). Concrete grades shall match grades established by compacted base material.

5.2 CONTRACTOR shall tie new concrete floor into walls and ramps according to attached structural plans.

6.0 Computer Controlled Cartridge Filter System

6.1 CONTRACTOR shall install an Aqualogic Standard Filter Basin as shown on the attached plans.

6.2 CONTRACTOR shall install 84 cartridges in accordance with the attached plans.

6.3 CONTRACTOR shall install all necessary components to provide a fully functional Computer Controlled Cartridge Filter System including, but not limited to:

- OSHA compliant access ladders
- Grout fill sloped to drain to filters
- 8" thick rock covering 4" diameter crushed rock covering inlet to the filtration basin
- Neenah R-7512-A C.I. Pipe Screen covering inlet to the filtration basin

GENERAL NOTES:
1.0 GENERAL
1.1 THIS RETAINING WALL DESIGN IS SITE SPECIFIC AND MAY NOT BE USED FOR DIFFERENT SITE LOCATIONS WITHOUT WRITTEN PERMISSION FROM OUTLIER ENGINEERING, INC (OUTLIER)

1.2 DRAWINGS BY DEH STRUCTURAL ENGINEERING, INC PROVIDED BY COMAL COUNTY DATED NOVEMBER, 2003.

1.7 SEE SITE PLAN, ARCHITECTURAL PLAN, OR DESIGNER PLAN FOR ACTUAL TOP-OF-SLAB FINISH FLOOR ELEVATION.

1.8 THE STRUCTURE HAS BEEN DESIGNED TO RESIST DESIGN LOADS ONLY AS A COMPLETED STRUCTURE. APPLICATION OF CONSTRUCTION LOADS TO THE PARTIALLY COMPLETED STRUCTURE SHALL BE CONSIDERED BY THE CONTRACTOR AND SO INCLUDED IN THE DESIGN OF SHORING, BRACING, FORMWORK, AND ANY OTHER SUPPORTING ELEMENTS PROVIDED FOR CONSTRUCTION OF THE STUCTURE. WHEN SPECIFIED IN THE CONTRACT DOCUMENTS, OR REQUIRED BY THE STURCTURAL ENGINEER, CONTRACTOR SHALL PRODUCE CALCULATIONS PREPARED BY A REGISTERED ENGINEER IN THE STATE OF TEXAS, WHICH VERIFY THE MEANS OF STRUCTURALLY MAINTAINING THE INTERGRITY OF THE STRUCTURE DURING CONSTRUCTION.

1.9 DURING ERECTION AND UNTIL ALL PERMANENT CONNECTIONS ARE MADE, THE CONTRACTOR SHALL PROVIDE TEMPOARY BRACING TO BRACE THE STRUCTURE IN ALL DIRECTIONS. (REF. 1.8).

1.10 GENERAL CONTRACTOR SHALL CHECK AND VERIFY ALL DIMENSIONS, GRADE CONDITIONS, (BOTH NEW AND EXISTING). EXISTING STRUCTUAL DETAILS (IF ANY), REPORTING ANY DISCREPANCIES TO THE STRUCTURAL ENGINEER BEFORE PROCEEDING WITH ANY PHASE OF THE WORK AS THE GENERAL CONTRACTOR SHALL BE RESPONSIBLE FOR ALL WORK FITTING AS INTENDED BY THE CONTRACT DOCUMENTS

2.0 DESIGN DATA AND CRITERIA

2.1 THE FOUNDATION DESIGN UTILIZED GUIDANCE PROVIDED IN THE 2006 IBC AND ACI 301-02.

2.2 STRUCTURAL FOUNDATION DESIGN LOADS:

DEAD LOAD: WEIGHT OF RETAINING WALL COMPONENTS

LIVE LOAD:
RETAINED FLUID 62.4LBS/CF

SEIMIC DESIGN CATEGORY A
SITE CLASS UNKNOWN- NO GEOTECHNICAL INFORMATION PROVIDED
Ss=0.096G
S1=0.031G

4.0 FOUNDATION CONSTRUCTION

4.1 THE EXISTING CONCRETE MUST BE CLEANED WITH A POWER WASHER OR SCRUB BRUSH AND ALL MATERIAL RINSED FROM THE SURFACE.

4.2 USE HAND OPERATED TAMPING EQUIPMENT WITHIN THE HEIGHT OF THE WALL BEHIND THE WALL TO COMPACT FILL.

4.10 FORMWORK SHORING SHALL BE DESIGNED IN ACCORDANCE WITH THE LATEST EDITION OF THE AMERICAN CONCRETE INSTITUTE (ACI) ACI 347, "STANDARD FOR DESIGN AND PLACEMENT OF CONCRETE FORMWORK".

4.11 ALL CONCRETE SHALL BE PLACED IN ACCORDANCE WITH ACI 302.1R.

4.12 PROPER CURING OF ALL CONCRETE SURFACES SHALL BE PROVIDED BY THE BUILDER AND IN ACCORDANCE WITH THE LATEST EDITION OF ACI 308, "THE STANDARD PRACTICE FOR CURING CONCRETE." IF SPRAY-ON CURING COMPOUNDS ARE USED, THEY NEED TO BE COMPATIBLE WITH SUBSEQUENT FINISH

4.13 CONVEY AND PLACE CONCRETE IN SUCH A MANNER THAT THERE WILL BE NO SEPARATION OF INGREDIENTS. MAXIMUM HEIGHT OF CONCRETE FREE FALL IS 5 FEET. REGULATE THE RATE OF PLACEMENT SO CONCRETE REMAINS ELASTIC AND FLOWS INTO POSITION. ALL CONCRETE SHALL BE THOROUGHLY CONSOLIDATED BY SUITABLE MEANS DURING PLACEMENT AND SHALL BE THOROUGHLY WORKED AROUND REINFORECEMENT AND EMBEDDED ITEMS AND INTO CORNERS OF FORMS, ELIMINATING AIR AND ROCK POCKETS THAT MAY CAUSE HONEYCOMBING, PITTING, OR PLANES OF WEAKNESS.

4.14 DO NOT PLACE CONCRETE WHEN TEMPERATURE IS BELOW 40 DEGREES FAHRENHEIT UNLESS COLD WEATHER CONCRETE PROCEDURES ARE FOLLOWED. CALCIUM CHLORIDE SHALL NOT BE USED. PROVIDE SPECIAL CARE TO PREVENT HIGH TEMPERATURES DURING HOT WEATHER CONDITIONS IN FRESH CONCRETE. USE WATER REDUCING AND SET RETARDING ADMIXTURES IN SUCH QUANTITIES AS SPECIFICALLY RECOMMENDED BY THE MANUFACTURER TO ENSURE THE CONCRETE REMAINS WORKABLE.

4.15 SCHEDULING OF CONCRETE DELIVERY SHALL BE SUCH TO PREVENT PLACED CONCRETE FROM HARDENING PRIOR TO PLACEMENT OF ADDITIONAL FRESH CONCRETE. NO HORIZONTAL JOINTS WILL BE PREMITTED IN THE CONCRETE EXCEPT AS NOTED. THE BUILDER SHALL CONTACT OUTLIER PRIOR TO PLACING ANY CONCRETE IF CONSTRUCTION JOINTS ARE REQUIRED.

4.16 SLAB SURFACE FINISH SHALL BE TROWELED FINISHES SUITABLE (TRUE AND LEVEL) AND/OR OWNER REQUIREMENTS. SLAB FINISH TOLERANCES SHALL BE TRUE PLANES WITHIN 1/8 INCH IN 10 FEET AS DETERMINED BY A 10 FOOT DIRECTION.

5.0 CONCRETE AND REINFORCING STEEL.

5.1 ALL CONCRETE AND REINFORCING STEEL SHALL MEET LATEST EDITION OF ASTM A615 AND ACI 117 "STANDARD TOLERANCES FOR CONCRETE CONSTRUCTION AND MATERIALS".

5.2 CONCRETE SHALL BE PLACED IN ACCORDANCE WITH LATEST EDITION OF ACI 301 "SPECIFICATION FOR STRUCTURAL CONCRETE FOR BUILDINGS".

5.3 CONCRETE SHALL BE CLASS C. TXDOT SPECIFICATION 421.

5.4 REINFORCING STEEL SHALL BE DEFORMED BARS CONFORMING TO ASTM A615 GRADE 60, TXDOT SPECIFICATION 440.

5.5 UNLESS NOTED, CONCRETE COVER OVER REINFORCING SHALL BE:
-3" WHEN THE CONCRETE IS PLACED DIRECTLY AGAINST THE GROUND.
- 2" FOR BARS LARGER THAN NO. 5, AND
1½" FOR NO. 5 AND SMALLER, IF AFTER REMOVAL OF FORMS THE CONCRETE IS EXPOSED DIRECTLY TO WEATHER OR GROUND.
-1" IN SLABS AND WALLS, AND 1½" FOR BEAMS AND COLUMNS NOT EXPOSED DIRECTLY TO WEATHER OR GROUND.

5.6 WELDED WIRE MESH (WWM) SHALL MEET LATEST EDITION OF ASTM A-185 OR ASTM A-497. USE FLAT SHEETS ONLY. ALL LAPS TO BE 2 FULL SQUARES.

5.7 ALL REINFORCEMENT SHALL BE SECURELY SUPPORTED AT 48" O.C. TO PREVENT VERTICAL AND HORIZONTAL MOVEMENT DURING THE PLACEMENT OF CONCRETE, METAL, PLASTIC, CONCRETE, OR MASONRY CHAIRS MAY BE USED TO SUPPORT REINFORCEMENT.

5.8 ALL REINFORCING HOOKS SHALL BE STANDARD HOOKS AS DEFINED BY ACI, U.N.O

5.9 REINFORCING STEEL LAPS AND SPLICES SHALL BE A MINIMUM OF 30 BAR DIAMETERS, BUT NO LESS THAN 12 INCHES. SPLICES OF THE TOP AND BOTTOM BEAM REINFORCEMENT SHALL BE STAGGERED A MINIMUM OF 5 FEET.

5.10 ALL BEAM SIZES, SLAB THICKNESS, AND REINFORCING SIZES ARE A MINIMUM AND SHALL NOT BE DECREASED WITHOUT PRIOR APPROVAL BY
OUTLIER.

5.11 ALL EXPOSED EDGES OF CONCRETE SHALL HAVE A 1 INCH, 45 DEGREE CHAMFER.

5.12 MAXIMUM AGGREGATE SHALL BE AS FOLLOWS:
WALLS, STRUCTURAL SLABS, BEAMS..3/4"
FOOTING, SLABS ON GRADE ……. 1½"

5.13 GRIND ALL CONSTRUCTION JOINTS IN SLAB SO AS TO PRODUCE A SMOOTH AND LEVEL SURFACE.

6.0 SITE OBSERVATION INSPECTIONS BY OUTLIER

6.1 OUTLIER ACCEPTS NO RESPONSIBILITY FOR THE PERFORMANCE OF THIS RETAINING WALL UNLESS SITE OBSERVATIONS ARE PERFORMED BY OUTLIER OR A REPRESENTATIVE OFOUTLIER AND THE CONCRETE IS PLACED WITHIN 48 HOURS AFTER THE OUTLIER SITE OBSERVATION INSPECTION.

6.2 OBSERVATIONS MADE BY OUTLIER ARE TO CHECK FOR GENERAL CONFORMANCE WITH THE OUTLIER PLANS AND SPECIFICATIONS. THE RESPONSIBILITY FOR ENSURING ACCURACY OF THE CONSTRUCTION AND QUALITY CONTROL PROCEDURES REMAIN WITH THE BUILDER.

6.4 THE BUILDER SHALL NOT PLACE ANY CONCRETE UNTIL OUTLIER HAS CONDUCTED THE SITE OBSERVATION AND HAS GIVEN APPROVAL TO PLACE CONCRETE.

6.5 NOTIFY OUTLIER AT LEAST 48 HOURS BEFORE EACH SITE OBSERVATION INSPECTION IS NEEDED.

THE FOLLOWING TxDOT SPECS ARE INCLUDED IN THE NOTES AND SPECIFICATIONS BY THIS REFERENCE.

400 EXCAVATION AND BACKFILL FOR STURCTURES

420 CONCRETE STRUCTURES

421 HYDRAULIC CEMENT CONCRETE

440 REINFORCING STEEL

7.0 PENETRATION DETAIL NOTES –

7.1 CHANNEL WALL PENETRATIONS FOR HOLES 4" OR GREATER, UPTO 1'-6"

7.2. FOR EACH BAR INTERRUPTED BY THE PENETRATION, PLACE EQUIVALENT STEEL, 1/2 TO EACH SIDE OF PENETRATION, FULL HEIGHT / LENGTH

7.3. FOR PENETRATIONS LESS THAN 4", AVOID REINFORCING AND MAINTAIN 2" MIN COVER.

7.4. VERTICAL REINFORCING SHOWN IN PENETRATION DETAIL FOR RETAINING WALL REPLACEMENT ALSO APPLIES TO HORIZONTAL STEEL, EXTEND 2' PAST OPENING.

7.5. FOR PENETRATIONS OUTSIDE THESE PARAMETERS, CONTACT ENGINEER

8.0 DOWELS
8.1 USE HILTI HIT HY 150MAX ADHESIVE ACCORDING TO MANUFACTURER'S RECOMMENDATIONS. DRILL AND EPOXY DOWEL INTO EXISTING SLAB. DO NOT CUT EXISTING REBAR DURING INSTALLATION.

STATE OF TEXAS
A. M. STONE
91049
LICENSED
PROFESSIONAL ENGINEER
15 Sept 2014

OUTLIER ENGINEERING,INC.
290 Old Court
New Braunfels, TX 78132
www.outlierengs.com
Ph:830.837.0262
Firm Registration # 14084

DETENTION POND
RETAINING WALL MODIFICATIONS

COMAL COUNTY
195 DAVID JONAS DRIVE
NEW BRAUNFELS, TEXAS 78132

REV NO	DATE	BY

JOB NO.: 14-0122
PREPARED BY: SSP
CHECKED BY: -
DATE: 09/12/14
SHEET NO.
S1
OF S3

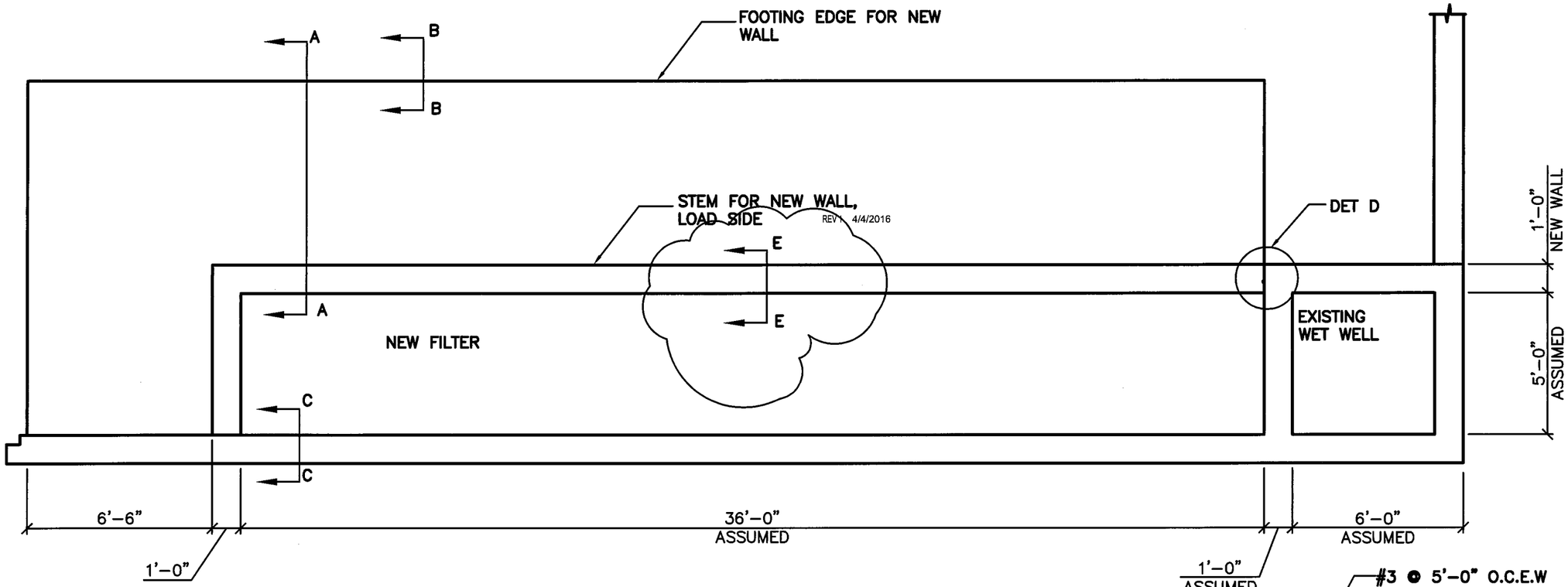

CONCEPTUAL PLAN VIEW OF NEW WALL

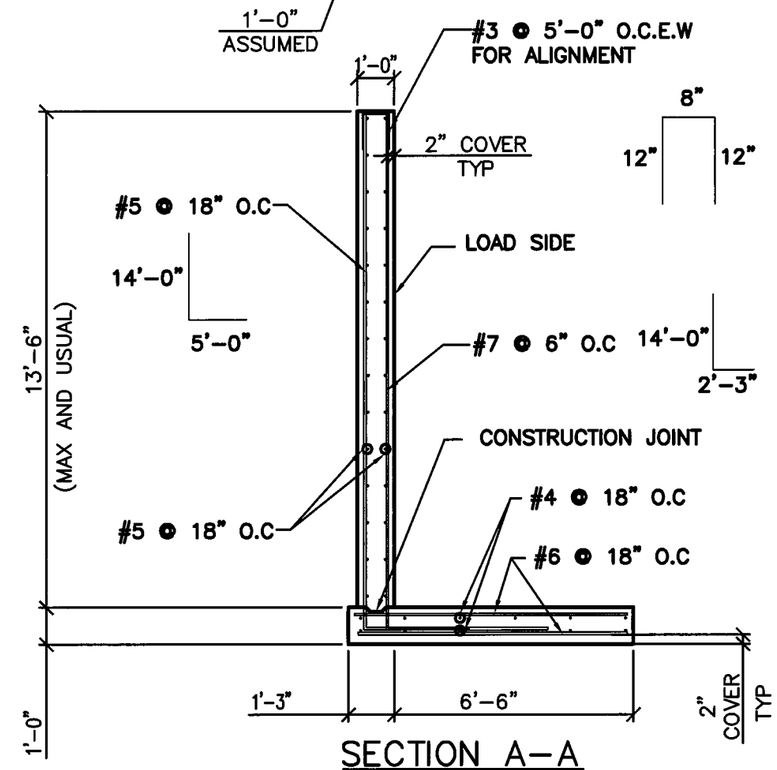

SECTION A–A

TYPICAL CROSS SECTION OF RETAINING WALL

THE SEAL WAS AUTHORIZED BY A.M. STONE, P.E. 91049 ON 04/04/2016. THE ORIGINAL SEALED DRAWING IS ON FILE AT OUTLIER ENGINEERING, INC.

A.M. Stone, PE

STATE OF TEXAS
A.M. STONE
91049
LICENSED
PROFESSIONAL ENGINEER

OUTLIER ENGINEERING, INC.
240 Oak Court
New Braunfels, TX 78132
Firm Registration # 14384
www.outlierengg.com
Ph: 830.837.0242

DETENTION POND
RETAINING WALL MODIFICATIONS

COMAL COUNTY
195 DAVID JONAS DRIVE
NEW BRAUNFELS, TEXAS 78132

REV NO	DATE	BY
1	4/4/2016	AMS

JOB NO.: 14-0122
PREPARED BY: SSP
CHECKED BY: -
DATE: 09/12/14

SHEET NO.
S2
OF S3

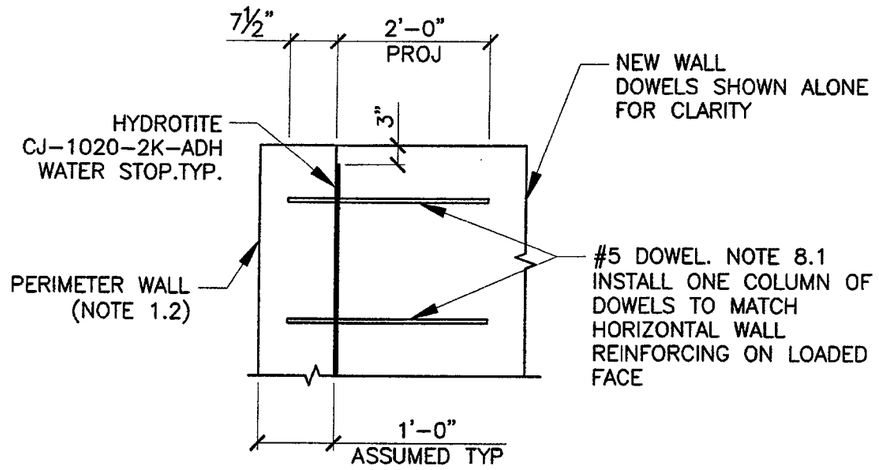

ELEVATION
SECTION C-C
SIMILAR TO WET WALL
CONNECTION BETWEEN
WET WELL AND NEW WALL

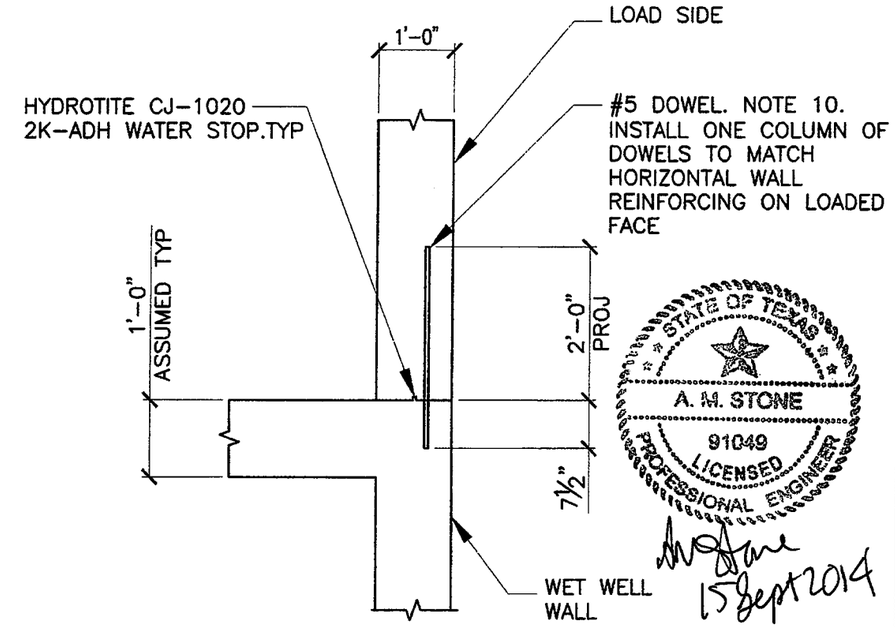

PLAN
DETAIL D
CONNECTION BETWEEN
WET WELL AND NEW WALL
SIMILAR TO PERIMETER WALL

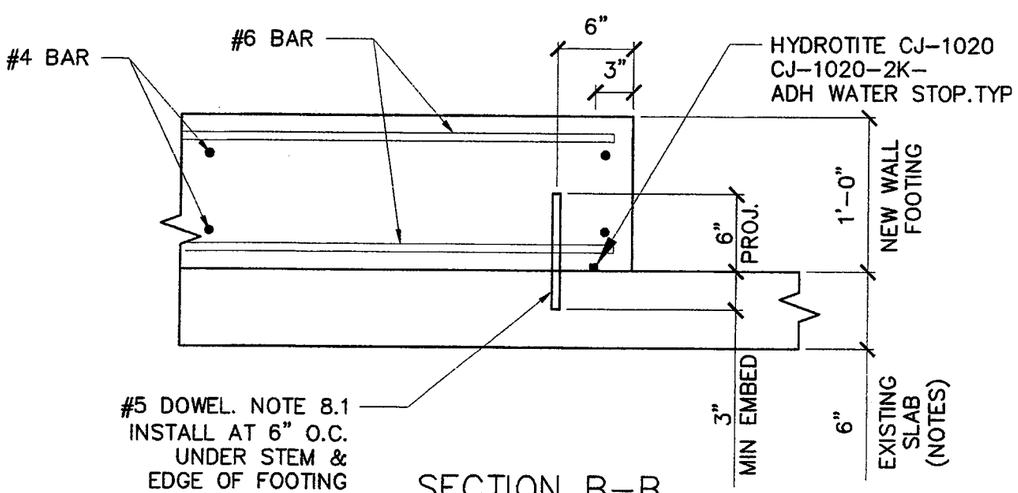

SECTION B-B
CONNECTION BETWEEN
SLAB AND NEW WALL

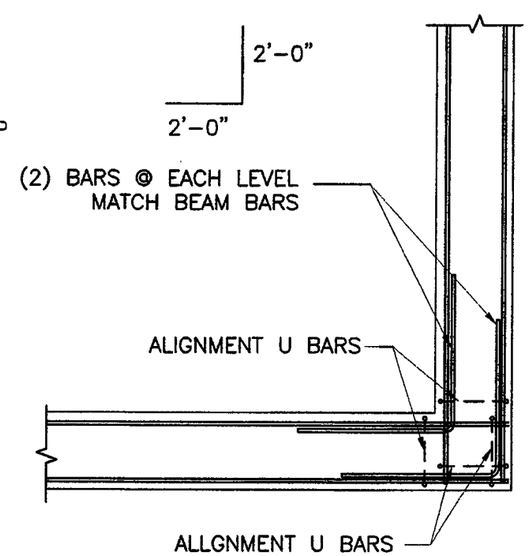

TYP. CORNER DETAIL

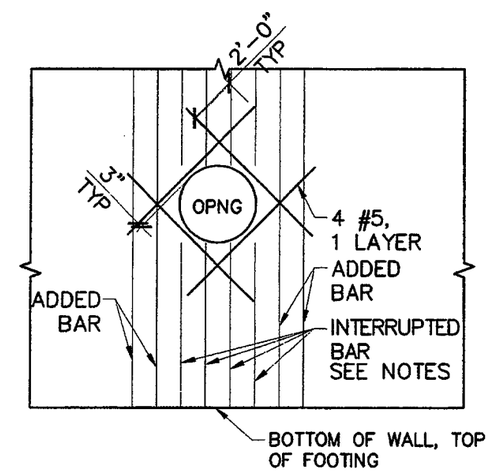

PENETRATION DETAIL
FOR RETAINING WALL

OUTLIER ENGINEERING, INC.
240 Oak Court
New Braunfels, TX 78132
Firm Registration # 14384
www.outlierengineering.com
Ph:830.837.0242

DETENTION POND
RETAINING WALL MODIFICATIONS

COMAL COUNTY
195 DAVID JONAS DRIVE
NEW BRAUNFELS, TEXAS 78132

REV NO	DATE	BY

JOB NO.: 14-0122
PREPARED BY: SSP
CHECKED BY: -
DATE: 09/12/14
SHEET NO.
S3
OF S3

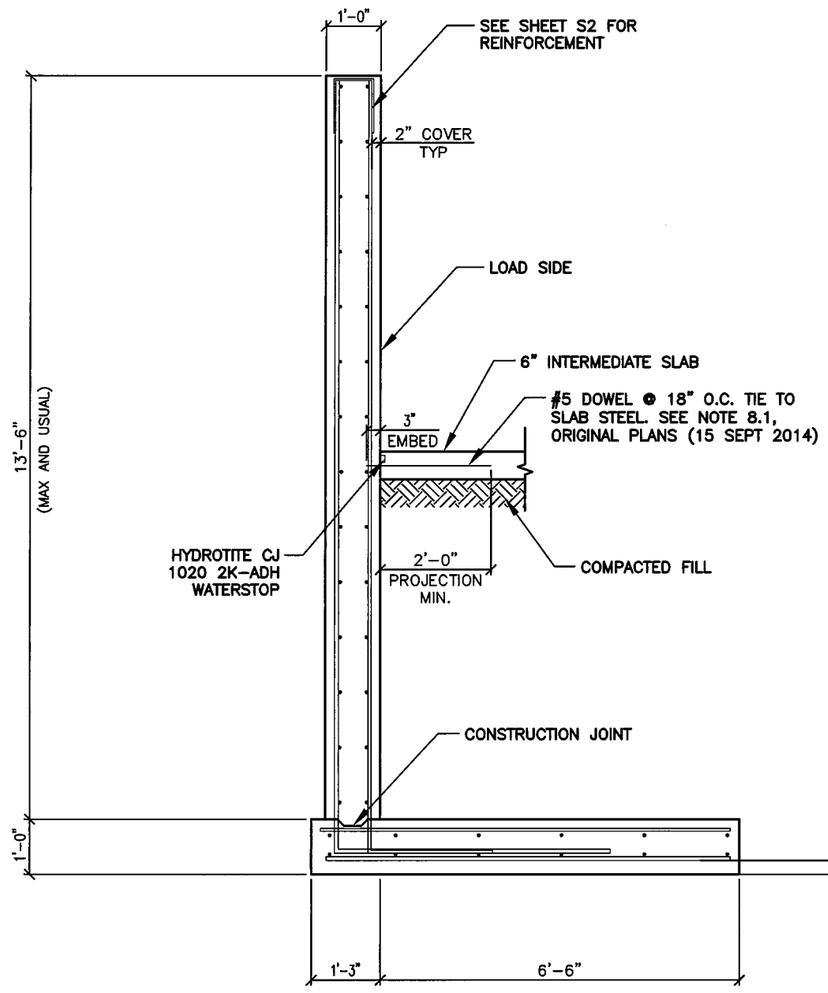

SECTION E

INTERMEDIATE SLAB CONNECTION TO WALL

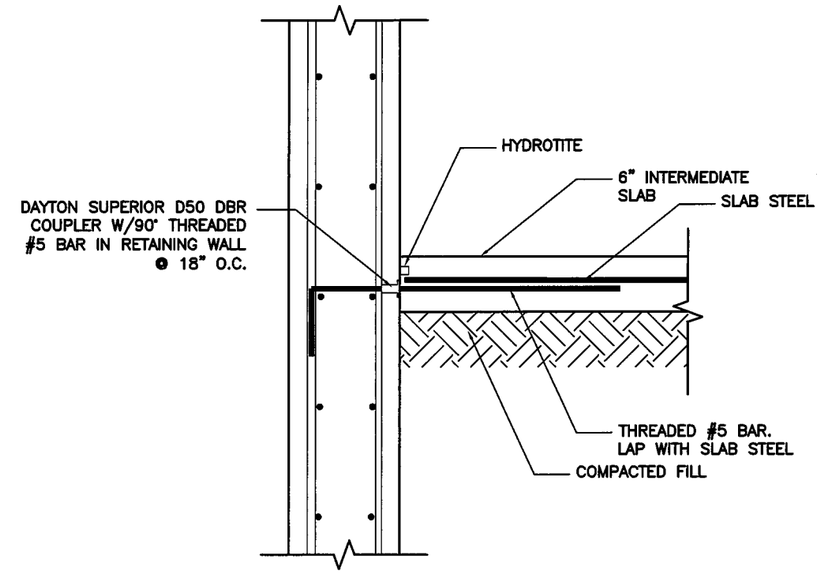

ALTERNATE SECTION E

THE SEAL WAS AUTHORIZED BY A.M. STONE, P.E. 91049 ON 4/4/2016. THE ORIGINAL SEALED DRAWING IS ON FILE AT M&S ENGINEERING, INC.

STATE OF TEXAS
A.M. STONE
91049
LICENSED
PROFESSIONAL ENGINEER

A.M. Stone, P.E.

OUTLIER ENGINEERING, INC.
240 Old Court
New Braunfels, TX 78132
www.outlierengr.com
Ph.830.837.0242
Firm Registration # 14384

DETENTION POND
RETAINING WALL MODIFICATIONS

COMAL COUNTY
195 DAVID JONAS DRIVE
NEW BRAUNFELS, TEXAS 78132

REV NO	DATE	BY

JOB NO.: 14-0122
PREPARED BY: SSP
CHECKED BY: -
DATE: 09/12/14

SHEET NO.
S4
OF S4

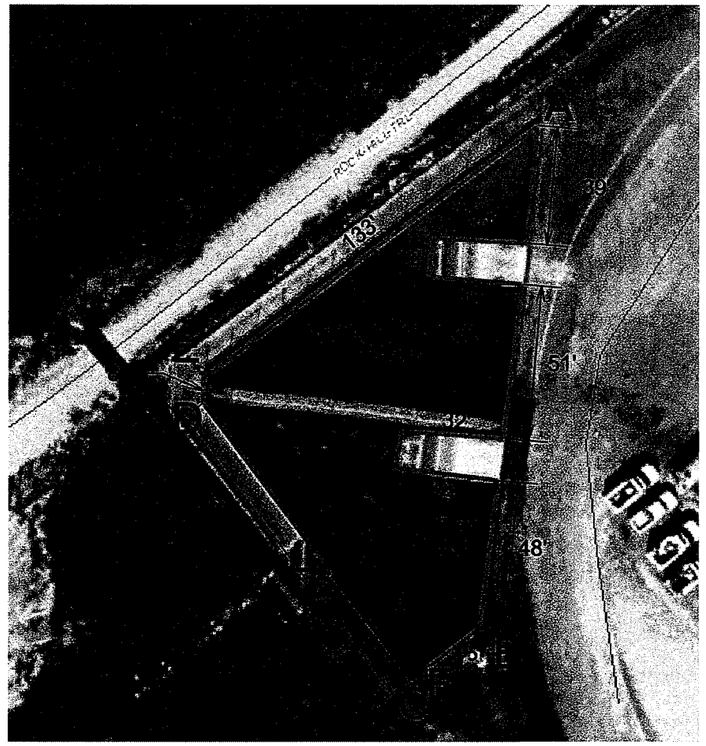

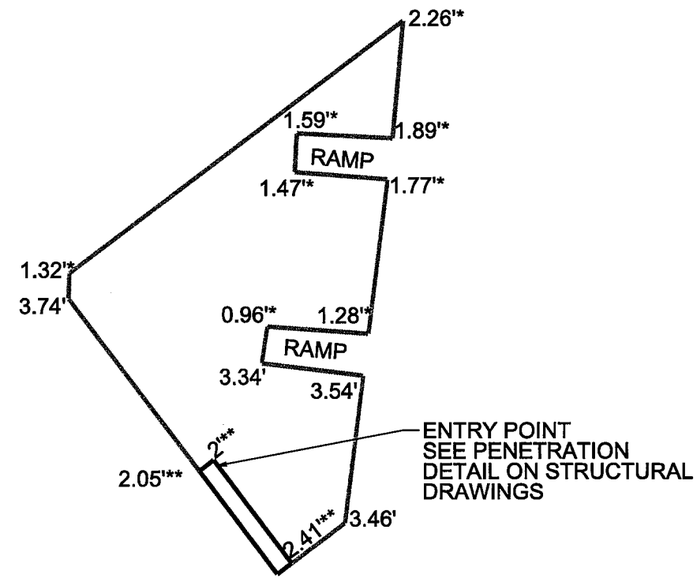

ELEVATIONS (FT) ABOVE FINISHED
GRADE TO TOP OF COMPACTED BASE
(NTS)

* ELEVATIONS FROM FLOOR ASSUMED TO BE ON TOP OF 2.5' STEP-UP
** ELEVATIONS FROM FLOOR TO BE ON TOP OF FOOTING DETAILED IN STRUCTURAL DRAWINGS

SCOPE:

1) REMOVE EXCESS WATER, ROCK GABIONS, FILTRATION SAND AND GRAVEL AND PIPING NETWORK. ALL WASTE MATERIAL SHALL BE DISPOSED OF BY CONTRACTOR AT CONTRACTOR'S EXPENSE.

2) BUILD WALL I-G-H (TOP OF WALL WILL MATCH HEIGHT OF EXISTING BASIN) IN ACCORDANCE WITH ATTACHED STRUCTURAL DRAWINGS.

3) PLACE BASE MATERIAL, COMPACTED IN 6" LIFTS IN AREA MARKED A-B-F-G-H-D-E. TOP OF BASE MATERIAL ELEVATIONS PROVIDED BY DRAWING, "ELEVATIONS (FT) ABOVE FINISHED GRADE TO TOP OF COMPACTED BASE." CONTRACTOR SHALL FIELD VERIFY ALL DIMENSIONS TO DETERMINE VOLUME OF COMPACTED BASE MATERIAL.

4) PLACE 6" CONCRETE SLAB, MATCHING COMPACTED BASE GRADES. CONCRETE SLAB SHALL HAVE #4 REBAR @ 12" O.C. BOTH WAYS. TIE INTO EXISTING WALL/RAMP IN ACCORDANCE WITH ATTACHED STRUCTURAL DRAWINGS.

NTS

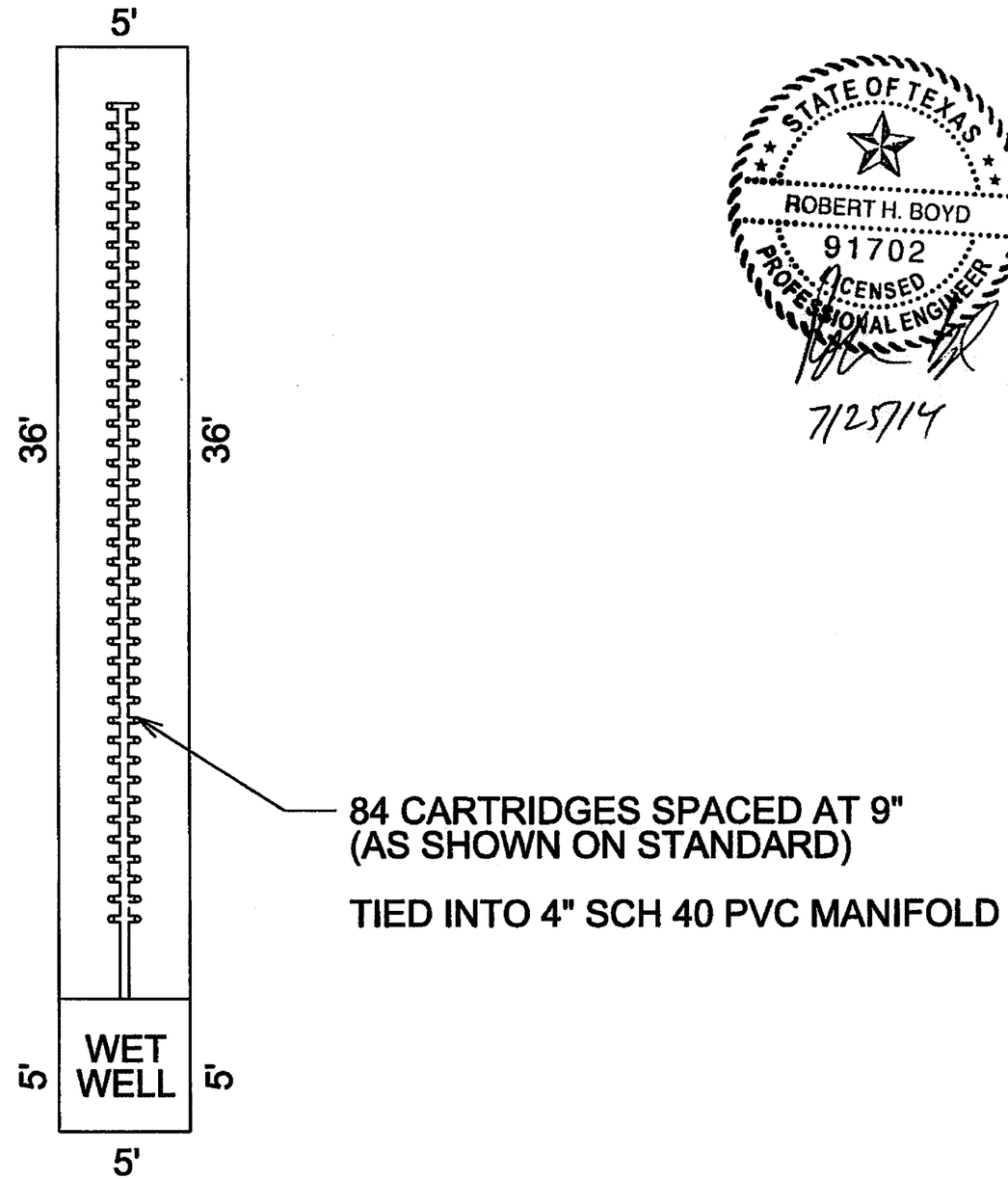

AQYALOGIC CARTRIDGE SYSTEM PLANS
NTS

STANDARD INSTALLATION MATRIX

ITEM -- PROVIDED AND INSTALLED BY

SEDIMENTATION BASIN
ALL CONSTRUCTION -- BY SITE CONTRACTOR

FILTRATION BASIN
WALLS -- SITE CONTRACTOR
SUBFLOOR -- SITE CONTRACTOR
TOP -- SITE CONTRACTOR
ACCESS LADDER -- SITE CONTRACTOR
ACCESS DOOR FOR COVERED CHAMBERS -- SITE CONTRACTOR

INFLOW PIPING
PVC WALL PIPE -- SITE CONTRACTOR
CONTROL VALVE -- AQUALOGIC ™
PROTECTIVE GRATE * -- SITE CONTRACTOR
GRAVEL PACK * -- SITE CONTRACTOR
*AT UPSTREAM END OF INFLOW PIPE IN THE SEDIMENTATION CHAMBER

UNDERDRAIN SYSTEM
PIPE MANIFOLDS -- AQUALOGIC™
MANIFOLD HEADER -- AQUALOGIC™
THREADED RECEIVERS -- AQUALOGIC™
FINISHED FLOOR GROUT -- SITE CONTRACTOR
DISCHARGE TO OUTFALL -- SITE CONTRACTOR

FILTER CANISTERS
HOUSING AND CARTRIDGES -- AQUALOGIC™
GEOTEXTILE WRAP -- AQUALOGIC ™
FLOATING SEPARATOR RINGS -- AQUALOGIC™

CONTROLS
RACK OR POLE SUPPORT -- BY AQUALOGIC™
CONTROL PANEL, WIRING AND ALL CONTROL SYSTEM COMPONENTS -- AQUALOGIC™

NOTE: NON-STANDARD INSTALLATIONS CAN BE ACCOMPLISHED BY SPECIFIC AGREEMENT WITH AQUALOGIC™

C, 1998, SWAF, INC.
ALL RIGHTS RESERVED

AQUALOGIC DESIGN GUIDELINES

1.EACH FILTER CANISTER SHALL BE APPROXIMATELY EQUALLY SPACED WITHIN THE AVAILABLE FILTRATION AREA AND WILL BE CONNECTED TO A 4" SCH 40 PVC MANIFOLD. AQUALOGIC WILL DESIGN AND INSTALL THE FILTER MANIFOLD AND THE MANIFOLD HEADER WHICH WILL UTILIZE STANDARD PVC FITTINGS WITH SOLVENT WELD JOINTS AND WILL COLLECT THE FILTERED EFFLUENT TO A SINGLE DISCHARGE PIPE. THE MANIFOLD WILL INCLUDE A STANDARD FEMALE THREADED ADAPTER AT EACH POINT OF FILTER CANISTER CONNECTION. THE ADAPTER AT EACH POINT OF CONNECTION IS SET SO THAT THE VERTICAL MOUNTED CANISTER WILL BE STRAIGHT AND PLUMB.

2.ALL UNDERDRAIN PIPING SHALL BE EMBEDDED IN A LAYER OF WATERPROOF GROUT WITH A MINIMUM DEPTH OF 12" AT THE FILTER CANISTERS. THE FINISHED SURFACE OF THE GROUT LAYER SHALL BE FLUSH WITH THE BOTTOM OF THE FILTER CANISTERS AND BE SHAPED TO PREVENT PONDING WITH A MINIMUM SLOPE OF ø" PER FOOT. GROUTING SHALL BE INSTALLED BY THE SITE CONTRACTOR AFTER AQUALOGIC INSTALLS THE UNDERDRAIN PIPING.

3.THE AQUALOGIC ™CONTROL PANEL INCLUDING ALL COMPONENTS FOR AUTOMATIC OPERATION SHALL BE MOUNTED ON A SUITABLE RACK OR POLE EMBEDDED IN CONCRETE OR ATTACHED TO AN ACCESSIBLE LOCATION ON THE FILTRATION CHAMBER SIDEWALL.

4.THE MEDIA USED FOR FILTRATION SHOULD HAVE A MEAN FILTRATION RATING (AVERAGE PORE SIZE) OF 10 MICRONS OR AS NEEDED TO ACHIEVE 90 % REMOVAL EFFICIENCY FOR TSS, AS RATED BY THE MEDIA MANUFACTURER. THE MEDIA CARTRIDGES SHALL BE OF THE TYPE DISTRIBUTED BY SWAF, INC. (#ww.aqualogic-usa.com) OF SAN ANTONIO, TEXAS, OR EQUIVALENT. THE MEDIA SHALL BE PLEATED POLYESTER WRAPPED AROUND A CENTRAL CORE AND HAVE SEMI-FLEXIBLE MOLDED END CAPS CONFIGURED TO MATCH THE CANISTER SEALING RINGS TO RESTRICT BYPASS AROUND THE CARTRIDGE ENDS; AND SHALL BE 2.75 INCH (OUTSIDE DIAMETER) BY 29.25 INCHES IN LENGTH.

CHART "A"

THE AQUALOGIC FILTER CHAMBER MANIFOLD SYSTEM ALLOWS VERSATILITY IN THE DESIGN DIMENSIONS OF THE FILTER CHAMBER. BELOW ARE THE MINIMUM INSIDE DIMENSIONS FOR THE FILTER CHAMBER TO PROPERLY ACCOMMODATE A MANIFOLD OF SELECTED SIZE ACCORDING TO THE NUMBER OF FILTER CANISTERS. SEVERAL SAMPLES ARE INCLUDED

A MANIFOLD IS MADE UP OF SECTIONS CONSISITNG OF 2 FILTER CANISTERS PER SECTION. ADD 9 IN. TO THE LENGTH OF THE FILTER CHAMBER PER EACH ADDITIONAL SECTION OF MANIFOLD.

MANIFOLD ROWS	FILTER CHAMBER WIDTH "A"	"B"	"C"	"D"	"E"	"F"	TOTAL	FILTER CHAMBER LENGTH
1	3.0'	--	--	--	--	1.5'	4.5'	5'+[(NO. SECTIONS -1)*0.75']
2	3.0'	2.0'	--	--	--	3.0'	8.0'	MIN. LENGTH = 6' - 6" (1 MANIFOLD, 3 SECTIONS) (6 FILTERS)
3	3.0'	3.5'	2.0'	--	--	3.0'	11.5'	ADD 9" PER SECTION
4	3.0'	2.0'	3.5'	2.0'	--	3.0'	13.5'	MAX. 25 SECTIONS PER MANIFOLD = 23' - 0"
5	3.0'	3.5'	2.0'	3.5'	2.0'	3.0'	17.0'	

EXAMPLE 1: FILTER CHAMBER FOR 10 CANISTERS (5 SECTIONS)
1 MANIFOLD ROW WITH 5 SECTIONS.
FILTER CHAMBER 4' - 6" WIDE BY 8' - 0" LONG

EXAMPLE 2: FILTER CHAMBER FOR 35 CANISTERS (18 SECTIONS)
1 MANIFOLD ROW WITH 18 SECTIONS.
FILTER CHAMBER 4' - 6" WIDE BY 17' - 9" LONG
OR
2 MANIFOLD ROW WITH 9 SECTIONS EACH.
FILTER CHAMBER 8' - 0" WIDE BY 11' - 0" LONG
OR
3 MANIFOLD ROW WITH 6 SECTIONS EACH.
FILTER CHAMBER 11' - 6" WIDE BY 8' - 9" LONG

EXAMPLE 3: FILTER CHAMBER FOR 100 CANISTERS (50 SECTIONS)
2 MANIFOLD ROW WITH 25 SECTIONS EACH.
FILTER CHAMBER 8' - 0" WIDE BY 23' - 0" LONG
OR
3 MANIFOLD ROW WITH 17 SECTIONS IN 2 ROWS AND 16 SECTIONS IN 1 ROW.
FILTER CHAMBER 11' - 6" WIDE BY 17' - 0" LONG
OR
4 MANIFOLD ROW WITH 13 SECTIONS IN 3 ROWS AND 11 SECTIONS IN 1 ROW.
FILTER CHAMBER 13' - 6" WIDE BY 14' - 0" LONG

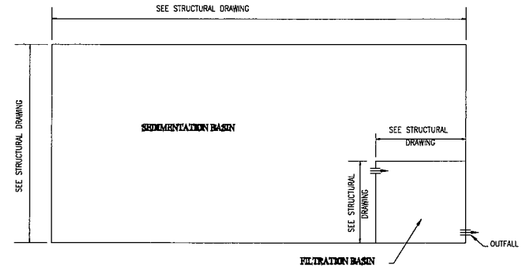

BASIN FLOOR ELEVATION SCHEMATIC
N.T.S.

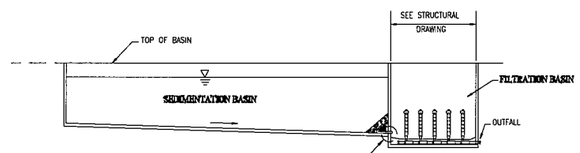

BASIN SECTION PROFILE
N.T.S.

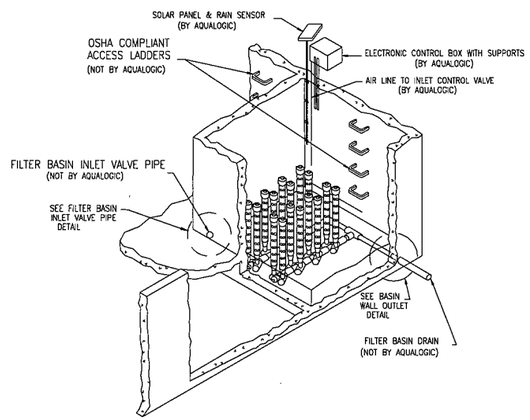

AQUALOGIC SYSTEM (TYPICAL)
N.T.S.

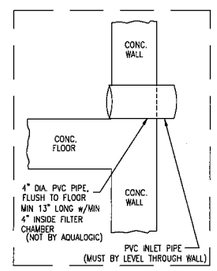

DETAIL 1A.
FILTER BASIN INLET VALVE PIPE

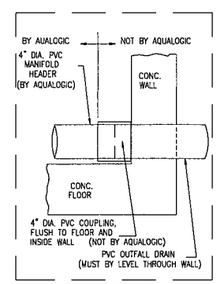

DETAIL 1B.
BASIN WALL OUTLET

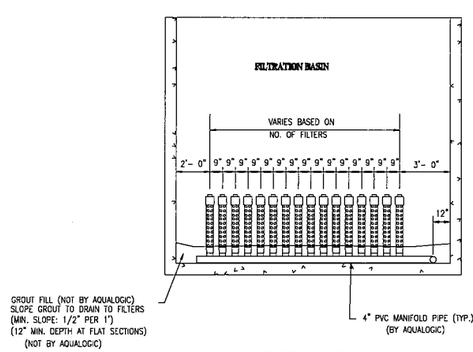

SECTION "A" - "A"
N.T.S.

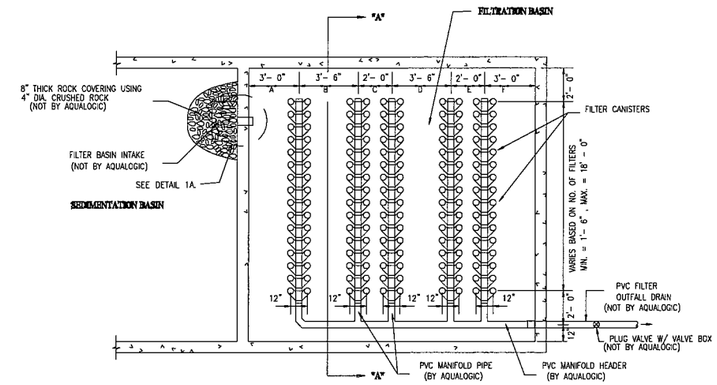

FILTRATION BASIN PLAN VIEW (TYPICAL)
N.T.S.

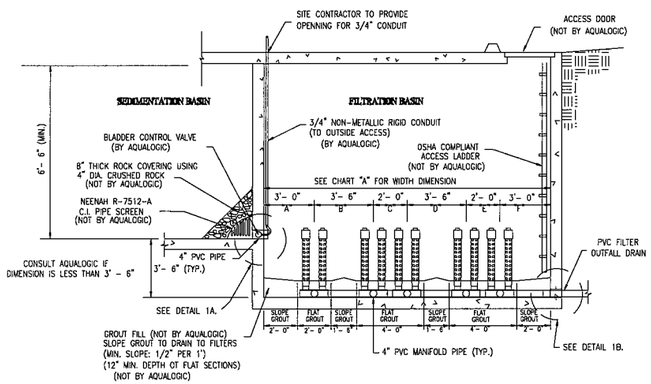

COVERED BASIN PROFILE VIEW (TYPICAL)
N.T.S.

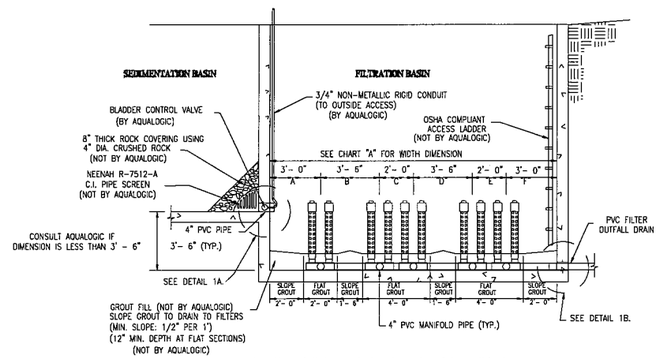

OPEN BASIN PROFILE VIEW (TYPICAL)
N.T.S.

No.	Date	REVISIONS	Apr.
			22 Mar 2006

AQUALOGIC

STANDARD FILTER BASIN DETAILS

SHEET NO. 1 OF 7